ALIGN

TB60

INSTRUCTION MANUAL

輕量化 動力強

二次降比 皮帶傳動

TAIL BELT DRIVE

Shopping Cart

TB60 MANUAL

TABLE OF CONTENTS 目錄

INTRODUCTION
前言 1

SAFETY NOTES
安全注意事項.....1

SAFETY CHECK BEFORE FLYING
飛行前安全檢查重要事項.....3

EQUIPMENT REQUIRED FOR ASSEMBLY
自備設備.....4

PACKAGE ILLUSTRATION
包裝說明.....4

MODEL STANDARD EQUIPMENT DIFFERENCE
標配版本介紹.....5

ASSEMBLY SECTION
組裝說明.....6

ELECTRONIC EQUIPMENT ILLUSTRATION
電子設備建議配置圖示.....23

ESC AND SERVO WIRING ILLUSTRATION
接線示意圖.....23

BATTERY INSTALLATION ILLUSTRATION
電池安裝示意圖.....23

CANOPY ASSEMBLY
機頭罩安裝.....24

SERVO SETTING AND ADJUSTMENT
伺服器設定調整.....25

ADJUSTMENTS FOR GYRO AND TAIL NEUTRAL SETTING
陀螺儀與尾翼中立點設定調整.....25

MAIN BLADES ROTATIONAL SPEED SETTING
主旋翼轉速設定.....25

POWER COLLOCATION REFERENCE
原裝動力數據參考表.....26

BRUSHLESS SPEED CONTROLLER INSTRUCTION MANUAL
無刷調速器使用說明.....27

CHECKLIST AFTER FLIGHT
飛行後檢查清單.....29

TROUBLESHOOTING
飛行中狀況排除.....31

TB60 SPECIFICATION COMPARISON TABLE
規格對照表.....33

ALIGN

Thank you for purchasing Align products. Please read the manual carefully before installing and be sure to retain the manual for future reference. All pictures shown are for illustration purpose only. Actual product may vary due to product enhancement. Specifications, contents of parts and availability are subject to change, ALIGN RC is not responsible for inadvertent errors in this publications.

承蒙閣下選用亞拓遙控世界系列產品，謹表謝意。
使用前，請務必詳閱本說明書，相信一定能夠給您帶來相當大的幫助，也請您妥善保管這本說明書，以做為日後參考。本公司將不對此印刷物之異動負責，也無法主動通知消費者任何更新或異動。所有圖片僅用於展示目的。產品可能因改良而有些不同。本說明書內記載的材質、規格或零件包裝之內容物如有異動，請依亞拓官網公告為主。

!!Remind!! 提醒

ALIGN
自行拆改裝 保固失效
The warranty could invalid if modified

Dear customers,
For your consumer rights, please do not disassemble or modify Align products. If there is any unauthorized disassembly or modification, the warranty of the product will become invalid immediately! Hereby declare!

敬愛的客戶：
為了您的消費權益，本公司所售出之產品請勿自行拆裝、改裝，如果有任何私自拆改裝，產品的保修、保固責任即刻失效！ 特此聲明！

INTRODUCTION 前言

Thank you for buying ALIGN Products. The TB60 Helicopter is designed as an easy to use, full featured Helicopter R/C model capable of all forms of rotary flight. Please read the manual carefully before assembling the model, and follow all precautions and recommendations located within the manual. Be sure to retain the manual for future reference, routine maintenance, and tuning. The TB60 is a new product developed by ALIGN. It features the best design available on the R/C helicopters market to date, providing flying stability for beginners, full aerobatic capability for advanced fliers, and unsurpassed reliability for customer support.

感謝您選購亞拓產品，為了讓您容易方便的使用亞拓遙控直昇機、請您詳細的閱讀完這本說明書之後再進行組裝以及操作這台直昇機，同時請您妥善的保存這本說明書、作為日後進行調整以及維修的參考。 TB60是由亞拓自行研發的新產品，不論您是需求飛行穩定性的初學者或是追求性能的飛行愛好者，都將是您最佳的選擇。

WARNING LABEL LEGEND 標誌代表涵義

FORBIDDEN 禁 止	Do not attempt under any circumstances. 在任何禁止的環境下，請勿嘗試操作。
WARNING 警 告	Mishandling due to failure to follow these instructions may result in damage or injury. 因為疏忽這些操作說明，而使用錯誤可能造成財產損失或嚴重傷害。
CAUTION 注 意	Mishandling due to failure to follow these instructions may result in danger. 因為疏忽這些操作說明，而使用錯誤可能造成危險。

IMPORTANT NOTES 重要聲明

Important Declaration: It's prohibited to fly before passing legal flight certificate (training certificate) of local laws and regulations. Please adhere to local regulation and management policy and pass test to get legal flight certificate (training certificate). Strictly forbid to operate flight by anyone who is unfamiliar with flight experience.

在尚未通過考取該國法規之合格飛行執照（訓練合格證）前，嚴禁實機飛行。請依循該國相關法規及管理辦法，通過考取合法之飛行執照（訓練合格證），嚴禁無熟練操控飛行經驗者操控飛行。

R/C helicopters, including the TB60 are not toys. R/C helicopter utilize various high-tech products and Technologies to provide superior performance. Improper use of this product can result in serious injury or even death. Please read this manual carefully before using and make sure to be conscious of your own personal safety and the safety of others and your environment when operating all ALIGN products. Manufacturer and seller assume no liability for the operation or the use of this product. Intended for use only by adults with experience flying remote control helicopters at a legal flying field. After the sale of this product we cannot maintain any control over its operation or usage.

As the user of this product, you are solely responsible for operating it in a manner that does not endanger yourself and others or result in damage to the product or the property of others.

TB60 遙控直昇機並非玩具，它是結合了許多高科技產品所設計出來的休閒用品，所以商品的使用不當或不熟悉都可能會造成嚴重傷害甚至死亡，使用之前請務必詳讀本說明書，勿輕忽並注意自身安全。注意！ 任何遙控直昇機的使用，製造商和經銷商是無法對使用者於零件使用的損耗異常或組裝不當所發生之意外負任何責任，本產品是提供給有操作過模型直昇機經驗的成人或有相當技術的人員在旁指導於當地合法遙控飛行場飛行，以確保安全無虞下操作使用，產品售出後本公司將不負任何操作和使用控制上的任何性能與安全責任。

做為本產品的使用者，您，是唯一對於您自己操作的環境及行為負全部的責任之人。

We recommend that you obtain the assistance of an experienced pilot before attempting to fly our products for the first time. A local expert is the best way to properly assemble, setup, and fly your model for the first time. TB60 Helicopter requires a certain degree of skill to operate, and is a consumer item. Any damage or dissatisfaction as a result of accidents or modifications are not covered by any warrantee and cannot be returned for repair or replacement. Please contact our distributors for free technical consultation and parts at discounted rates when you experience problems during operation or maintenance.
As Align Corporation Limited has no control over use, setup, final assembly, modification or misuse, no liability shall be assumed nor accepted for any resulting damage or injury. By the act of use, setup or assembly, the user accepts all resulting liability.

模型商品屬於需高操作技術且為消耗性之商品，如經拆裝使用後，會造成不等情況零件損耗，任何使用情況所造成商品不良或不滿意，將無法於保固條件內更換新品或退貨，如遇有使用操作維修問題，本公司全省分公司或代理商將提供技術指導、特價零件供應服務。對使用者的不當使用、設定、組裝、修改、或操作不良所造成的破損或傷害，本公司無法控制及負責。任何使用、設定、組裝、修改、或操作不良所造成的破損、意外或傷害，使用者應承擔全部責任。

SAFETY NOTES 安全注意事項

CAUTION 注 意

- Fly only in safe areas, away from other people. Do not operate R/C aircraft within the vicinity of homes or crowds of people. R/C aircraft are prone to accidents, failures, and crashes due to a variety of reasons including, lack of maintenance, pilot error, and radio interference. Pilots are responsible for their actions and damage or injury occurring during the operation or as of a result of R/C aircraft models.
- Prior to every flight, carefully check rotorhead, spindle, shaft screws and tail blade grip screws, linkage balls and screws, ensure they are firmly secured.
- 遙控模型飛機、直昇機屬高危險性商品，飛行時務必遠離人群，人為組裝不當或機件損壞、電子控制設備不良，以及操控上的不熟悉、都有可能 導致飛行失控損傷等不可預期的意外，請飛行者務必注意飛行安全，並需了解自負疏忽所造成任何意外之責任。
- 每趟飛行前須仔細檢查，主旋翼夾座橫軸螺絲、尾旋翼夾座螺絲，以及機身各部位球頭、螺絲，確實上膠鎖緊才能升空飛行。

FORBIDDEN 禁止 LOCATE AN APPROPRIATE LOCATION 遠離障礙物及人群

R/C helicopters fly at high speed, thus posing a certain degree of potential danger. Choose a legal flying field consisting of flat, smooth ground without obstacles. Do not fly near buildings, high voltage cables, or trees to ensure the safety of yourself, others and your model. For the first practice, please choose a legal flying field. Do not fly your model in inclement weather, such as rain, wind, snow or darkness.

直昇機飛行時具有一定的速度，相對的也潛在著危險性，場地的選擇也相對的重要，請需遵守當地法規到合法遙控飛行場地飛行。務必選擇在空曠合法專屬飛行場地，並必須注意周遭有沒有人、高樓、建築物、高壓電線、樹木等等，避免操控的不當造成自己與他人財產的損壞。請勿在下雨、打雷等惡劣天候下操作，以確保本身及機體的安全。

FORBIDDEN 禁止 NOTE ON LITHIUM POLYMER BATTERIES鋰聚電池注意事項

Lithium Polymer batteries are significantly more volatile than alkaline or Ni-Cd/Ni-MH batteries used in RC applications. All manufacturer's instructions and warnings must be followed closely. Mishandling of Li-Po batteries can result in fire. Always follow the manufacturer's instructions when disposing of Lithium Polymer batteries.

鋰聚電池跟一般在RC使用的鹼性電池、線鎘電池、線氫電池比較起來是相對危險的。請嚴格遵守鋰聚電池說明書之使用注意事項。不恰當使用鋰聚電池，可能造成火災並傷及生命財產安全，切勿大意！

FORBIDDEN 禁止 PREVENT MOISTURE 遠離潮濕環境

R/C models are composed of many precision electrical components. It is critical to keep the model and associated equipment away from moisture and other contaminants. The introduction or exposure to water or moisture in any form can cause the model to malfunction resulting in loss of use, or a crash. Do not operate or expose to rain or moisture.

直昇機內部也是由許多精密的電子零組件組成，所以必須絕對的防止潮濕或水氣，避免在浴室或雨天時使用，防止水氣進入機身內部而導致機件及電子零件故障而引發不可預期的意外！

FORBIDDEN 禁止 PROPER OPERATION 勿不當使用本產品

Please use the replacement of parts on the manual to ensure the safety of instructors. This product is for R/C model, so do not use for other purpose.

請勿自行改造加工，任何的升級改裝或維修，請使用亞拓產品目錄中的零件，以確保結構的安全。
請確認於產品限界內操作，請勿過載使用，並勿用於安全、法令外其它非法用途。

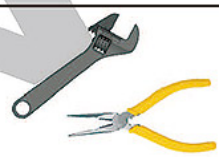

WARNING 警告 OBTAIN THE ASSISTANCE OF AN EXPERIENCED PILOT 避免獨自操控

Before turning on your model and transmitter, check to make sure no one else is operating on the same frequency. Frequency interference can cause your model, or other models to crash. The guidance provided by an experienced pilot will be invaluable for the assembly, tuning, trimming, and actual first flight or unforeseen danger may happen. (Recommend you to practice with computer-based flight simulator.)

至飛行場飛行前，需確認是否有相同頻率的同好正進行飛行，因為開啟相同頻率的發射器將導致自己與他人立即干擾等意外危險。遙控飛機操控技巧在學習初期有著一定的難度，要盡量避免獨自操作飛行，需有經驗的人士在旁指導，才可以操控飛行，否則將可能造成不可預期的意外發生。(動練電腦模擬器及老手指導是入門必要的選擇)

WARNING 警告 SAFE OPERATION 安全操作

Fly only in safe areas, away from crowds of people. do not hold helicopters in front of eyes. During take-off, landing, and flight, be sure to keep the helicopter away from all obstacles. Operators must stand at least 10 meters away from the helicopter to avoid injury caused by loose parts due to improper assembly or any unforeseen dangers. Operate this unit within your ability. Do not fly under tired condition and improper operation may cause in danger. Never take your eyes off the model or leave it unattended while it is turned on. Immediately turn off the model and transmitter when you have landed the model.

嚴禁用手抓取運行中的直昇機、務必遠離人群，並嚴禁直昇機對著眼睛；當主旋翼轉動後，或起飛／試飛時，務必遠離障礙物，站立位置必需距離10公尺以上，避免因人為組裝不當造成零件脫落，而引發不可預期的財物及人員損傷。請於自己能力內及需要一定技術範圍內操作這台直昇機，過於疲勞、精神不佳或不當操作，意外發生風險將可能會提高。不可在視線範圍外進行，降落後也請馬上關掉直昇機和遙控器電源。

CAUTION 注意 ALWAYS BE AWARE OF THE ROTATING BLADES 遠離運轉中零件

During the operation of the helicopter, the main rotor and tail rotor will be spinning at a high rate of speed. The blades are capable of inflicting serious bodily injury and damage to the environment. Be conscious of your actions, and careful to keep your face, eyes, hands, and loose clothing away from the blades. Always fly the model a safe distance from yourself and others, as well as surrounding objects.

直昇機主旋翼與尾旋翼運轉時會以高轉速下進行，在高轉速下的旋翼會造成自己與他人在身體上或環境上的嚴重損傷，請勿觸摸運轉中的主旋翼與尾旋翼，並保持安全距離以避免造成危險及損壞。

CAUTION 注意 KEEP AWAY FROM HEAT 遠離熱源

R/C models are made of various forms of plastic. Plastic is very susceptible to damage or deformation due to extreme heat and cold climate. Make sure not to store the model near any source of heat such as an oven, or heater. It is best to store the model indoors, in a climate-controlled, room temperature environment.

遙控飛機多半是以Pa纖維或聚乙烯、電子商品為主要材質，因此要盡量遠離熱源、日曬，以避免因高溫而變形甚至熔毀損壞的可能。

CAREFULLY INSPECT BEFORE REAL FLIGHT 請嚴格執行飛行前之檢查義務

CAUTION 注意

- Before flying, please check to make sure no one else is operating on the same frequency for the safety.
- Before flight, please check if the batteries of transmitter and receiver are enough for the flight.
- Before turn on the transmitter, please check if the throttle stick is in the lowest position. IDLE switch is OFF.
- When turn off the unit, please follow the power on/off procedure. Power ON- Please turn on the transmitter first, and then turn on receiver. Power OFF- Please turn off the receiver first and then turn off the transmitter. Improper procedure may cause out of control, so please to have this correct habit.
- Before operation, check every movement is smooth and directions are correct. Carefully inspect servos for interference and broken gear.
- Check for missing or loose screws and nuts. See if there is any cracked and incomplete assembly of parts. Carefully check main rotor blades and rotor holders. Broken and premature failures of parts possibly cause a dangerous situation.
- Check all ball links to avoid excess play and replace as needed. Failure to do so will result in poor flight stability.
- Check if the battery and power plug are fastened. Vibration and violent flight may cause the plug loose and result in out of control.

- 每次飛行前應先確認所使用的頻率是否會干擾他人，以確保您自身與他人的安全。
- 每次飛行前確定您發射器與接收器電池的電量是在足夠飛行的狀態。
- 開機前確認油門搖桿是否位於最低點，熄火降落開關，定速開關(IDLE)是否於關閉位置。
- 關機時必須遵守電源開關機的程序，開機時應先開啟發射器後，再開啟接收器電源；關機時應先關閉接收器後，再關閉發射器電源。不正確的開關程序可能會造失控的現象，影響自身與他人的安全，請養成正確的習慣。
- 開機請先確定直昇機的各個動作是否順暢，及方向是否正確，並檢查伺服器的動作是否有干涉或崩齒的情形，使用故障的伺服器將導致不可預期的危險。
- 飛行前確認沒有缺少或鬆脫的螺絲與螺帽，確認沒有組裝不完整或損毀的零件，仔細檢查主旋翼是否有損壞，特別是接近主旋翼夾座的部位。損壞或組裝不完整的零件不僅影響飛行 ，更會造成不可預期的危險。注意：每次飛行前的安全檢查、保養、及更換損耗零件，請確實嚴格執行以確 保安全。
- 檢查所有的連桿頭是否有鬆脫的情形，過鬆的連桿頭應先更新，否則將造成直昇機無法操控的危險。
- 確認電池及電源接頭是否固定牢靠，飛行中的震動或激烈的飛行，可能造成電源接頭鬆脫而造成失控的危險。

INTRODUCTION TO USE OF FUNCTIONAL GLUE/OIL/GREASE 各項功能性膠/油/脂的使用介紹

When you see the marks as below, please use relative glue or grease to ensure flying safety.
標有以下符號之組裝步驟，請配合上膠或上油，以確保鎖附零件使用之可靠度。

Oil 潤滑油 | CA Glue 瞬間膠 | Grease 潤滑油 | Anaerobic Retainer 管狀金屬強力結合膠 | Thread Lock 螺絲膠

- OIL : Add small amount of OIL.
  潤滑油：添加適量潤滑油
- CA : Apply small amount of CA Glue to fix.
  瞬間膠：使用適量瞬間膠固定
- Grease : Add small amount of Grease.
  潤滑油：添加適量潤滑油
- R48 : Apply small amount of Anaerobic Retainer to fix.
  管狀金屬強力結合膠：使用適量管狀金屬強力結合膠固定
  R48 is strictly forbidden to be used on screws.
  R48 嚴禁用於螺絲固定。
- T43 : Apply small amount of Thread Lock to fix.
  螺絲膠：使用適量螺絲膠

CAUTION 注意

Keep plastic parts away from heat.
塑膠件避免接近熱源。

When assembling ball links,
make sure the "A" character faces outside.
各項塑膠製連桿頭扣接時，" A "字請朝外。

T43 Glue width : approx. 1mm
T43 上膠寬度約1mm

1. Anaerobic Retainer (R48) is green penetrating threadlocker and is used to fix the metal tube before assembly at temperatures up to +180°C。
2. Thread Lock(T43) is blue low strength threadlocker and is applied to the small screw(threads) or metal parts before assembly to prevent loosening. Ensure to apply only a small amount and wipe surplus off. When disassembling, recommend to heat the metal joint about 15 Seconds.
3. Grease is kind of lubricant additive which is applied to the one-way bearings or thrust bearing.

◎Based on parts physical attributes, please apply small amount of the relative glue or grease accordingly to prevent any parts damage or loosening or unexpected danger happened.

1. 管狀金屬強力結合膠 (R48) 為綠色高強度快速固化的管狀金屬強力結合膠，適合於金屬管狀固定用，可耐高溫至 180° C。
2. 螺絲膠 (T43) 為藍色低強度螺絲膠，適合小型螺絲；使用於金屬內外徑或膠合螺絲時，請務必適量使用，必要時請用手去除多餘膠量，欲拆卸時可於金屬接合部位熱烤約 15 秒。
3. 潤滑油 (Grease) 為膏狀潤滑油，適用於單向軸承或止推軸承。

◎上述各類功能膠(油)請依零件屬性需求自行準備並斟酌其用量，以達到最佳組裝狀態，避免因使用不當造成零件損壞或不可預期的意外發生。

EQUIPMENT REQUIRED FOR ASSEMBLY 自備設備

RADIO TRANSMITTER AND ELECTRONIC EQUIPMENT 自備遙控及電子設備

Transmitter(6-channel or more, Helicopter system)
發射器(六動以上直昇機模式遙控器)

Receiver
(6-channel or more)
接收器(六動以上)

or
或

Remote Receiver
衛星天線

Intelligent Balance Charger
智慧型分壓充電器 RCC-6CX

Flybarless System
無平衡翼系統

[HET80001]
AP800 Digital Pitch Gauge
數位螺距規

[HETMT901]
Multi-function Tester
多功能檢測計

22.2V 6S 3300~5200mAh
Li-Po Battery 電池 x 2

ADDITIONAL TOOLS REQUIRED FOR ASSEMBLY 自備工具

Philips Screw Driver
十字螺絲起子
ϕ 3.0/ ϕ 1.8mm

Hexagon Screw Driver
六角螺絲起子
3mm/2.5mm/2mm/1.5mm

Needle Nose Pliers
尖嘴鉗

Cutter
刀子

[H70118]
Swashplate Leveler
十字盤校正器

Oil
潤滑油

CA Glue
瞬間膠

PACKAGE ILLUSTRATION 包裝說明

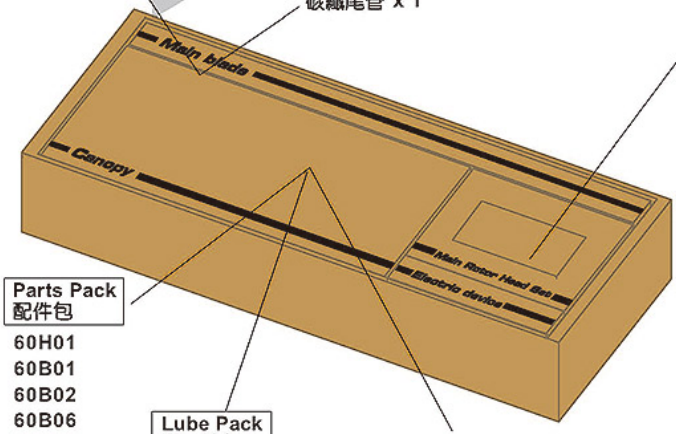

Parts Pack
配件包
60H02
60T04

Carbon Fiber Blades x 1set
碳纖主旋翼 x 1組

Carbon Fiber Tail Boom x 1
碳纖尾管 x 1

Parts Pack
配件包
60H01
60B01
60B02
60B06
60F01
60T01
60T02
60T03
60Z

Lube Pack
潤滑油包
Thread Lock
T43螺絲膠 x1
One Way Bearing Grease
單向軸承潤滑油 x1

Canopy
機頭罩
Repair Towel
維修桌巾

The 12S Combo version includes the following items
12S Combo版本包含以下商品

750MX (480KV/4236) Motor x 1
750MX (480KV/4236)無刷馬達 x 1
RCE-BL130A Brushless ESC x 1
RCE-BL130A無刷調速器 x 1
DS830M High Voltage Brushless Servo x 3
DS830M 高電壓無刷伺服器 x 3
DS835M High Voltage Brushless Servo x 1
DS835M 高電壓無刷伺服器 x 1

The 6S Combo version includes the following items
6S Combo版本包含以下商品

750MX (930KV/4236) Motor x 1
750MX (930KV/4236)無刷馬達 x 1
Microbeast Flybarless System
Microbeast無平衡翼系統
RCE-BL150A Brushless ESC x 1
RCE-BL150A無刷調速器 x 1
DS830M High Voltage Brushless Servo x 3
DS830M 高電壓無刷伺服器 x 3
DS835M High Voltage Brushless Servo x 1
DS835M 高電壓無刷伺服器 x 1

There are many versions of TB60 for your choice. The Combo includes additional electronics and other equipment. The Instruction Manual will refer to the TB60 Top Combo. You may purchase any additional items referenced in the instruction manual or any spare parts for other TB60 version by referring to more product information in this manual.

TB60系列商品有多種版本可作為選擇，除標準配備會因您購買的商品版本而有些微不同，在組裝、設定上都是一致的，在此我們以Top Combo作為操作範例，您也可依照書面上的商品資訊來增添其他選購商品。

Quick Finder
零件快速購

12S COMBO STANDARD EQUIPMENT 12S COMBO標準配備

[RH60E21XT]

TB60 Kit x1 set
TB60空機套件組

750MX (480KV/4236) Motor x 1
750MX (480KV/4236)無刷馬達

RCE-BL130A Brushless ESC x 1
RCE-BL130A無刷調速器

DS830M High Voltage Brushless Servo x 3
DS830M 高電壓無刷伺服器

DS835M High Voltage Brushless Servo x 1
DS835M 高電壓無刷伺服器

6S COMBO STANDARD EQUIPMENT 6S COMBO標準配備

[RH60E26XT]

TB60 Kit x1 set
TB60空機套件組

750MX (930KV/4236) Motor x 1
750MX (930KV/4236)無刷馬達

Microbeast Flybarless System
Microbeast無平衡翼系統

RCE-BL150A Brushless ESC x 1
RCE-BL150A無刷調速器

DS830M High Voltage Brushless Servo x 3
DS830M 高電壓無刷伺服器

DS835M High Voltage Brushless Servo x 1
DS835M 高電壓無刷伺服器

KIT STANDARD EQUIPMENT KIT標準配備

[RH60E31XT]

TB60 Kit x1 set
TB60空機套件組

ELECTRONIC EQUIPMENT REQUIRED FOR ASSEMBLY 自備電子設備

750MX (480KV/4236) or (930KV/4236) Motor x 1
無刷馬達 x 1

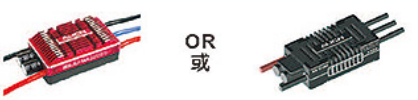

OR
或

RCE-BL130A or RCE-BL150A Brushless ESC
無刷調速器 x 1

MICROBEAST Flybarless System
無平衡翼系統 X 1

DS830M
High Voltage Brushless Servo
DS820M 高電壓無刷伺服器 x 3

DS835M
High Voltage Brushless Servo
DS825M 高電壓無刷伺服器 x 1

ROTORHEAD 主旋翼頭組

60H

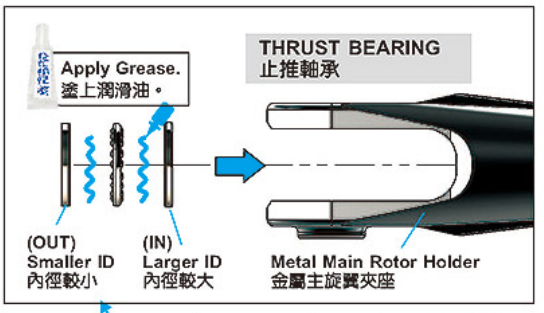

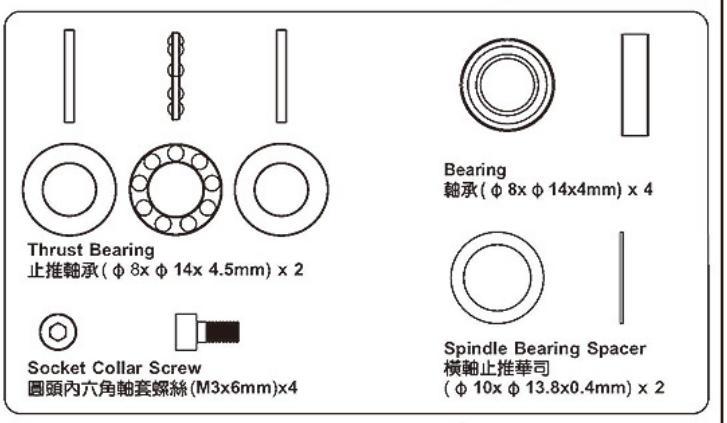

60H01

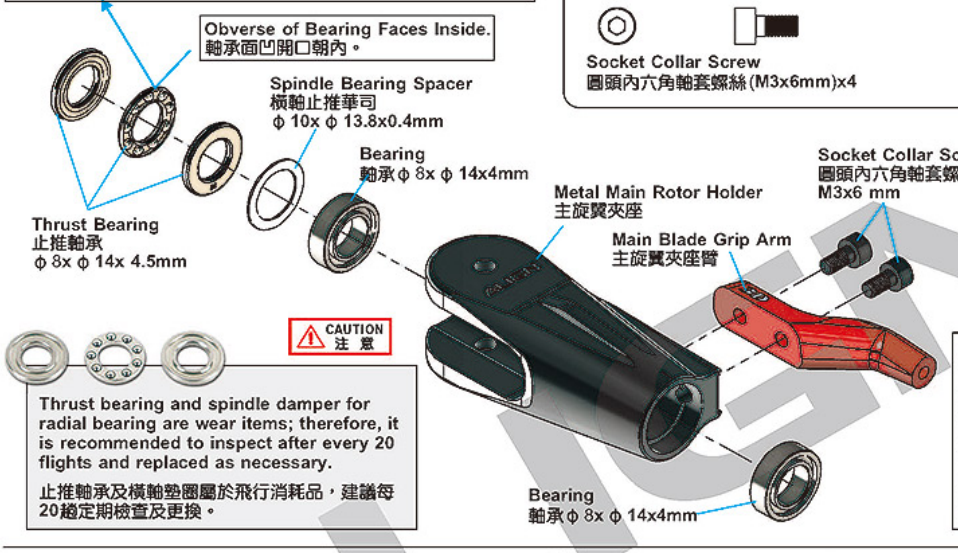

CAUTION 注 意

Thrust bearing and spindle damper for radial bearing are wear items; therefore, it is recommended to inspect after every 20 flights and replaced as necessary.

止推軸承及橫軸墊圈屬於飛行消耗品，建議每20趟定期檢查及更換。

WARNING 警 告

Please follow the instruction of Thrust Bearing: "IN" faces inward, "OUT" faces outward; Assembly in the wrong direction can cause interference, improper operation, and unpredictable danger.

請依止推軸承字樣指示："IN"朝內側、"OUT"朝外側；組裝方向錯誤會造成干涉、運轉不順暢。

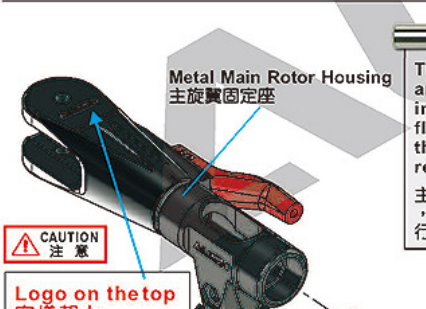

The spindle and spindle socket screws are wear items, and thus should be inspected for replacement after every 100 flights. For flights with high head speed, the inspection interval should be reduced to ensure flight safety.

主旋翼橫軸組、橫軸和橫軸螺絲屬於飛行消耗品，建議每100趟定期檢查及更換。主旋翼高轉速飛行時，請縮短定期檢查之趟數，以確保飛行安全。

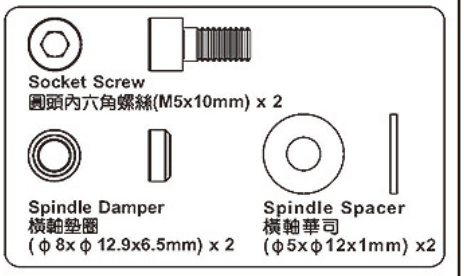

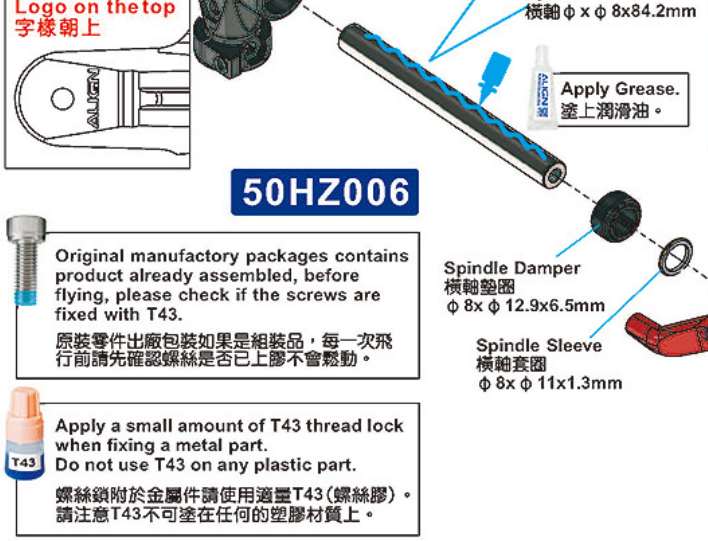

Please apply a small amount of T43 when tightening the spindle socket screws and make sure to tighten firmly, but not over tighten. Suggest using a torque wrench or torque lock when tightening screws. Torque value 20.0kg.cm

橫軸螺絲鎖附時需注意鎖附之緊度與使用適量的螺絲膠，建議搭配扭力扳手或扭力機鎖附螺絲，鎖定扭力值為20.0kg.cm。

CAUTION 注 意

3D flight 100 times or serious crash may cause metal fatigue or damaged. Please check and replace the Collar Screw.

暴力飛行100趟或有嚴重摔機，可能有金屬疲勞、破壞疑慮，請務必檢查更新橫軸螺絲。

50HZ006

Original manufactory packages contains product already assembled, before flying, please check if the screws are fixed with T43.

原裝零件出廠包裝如果是組裝品，每一次飛行前請先確認螺絲是否已上膠不會鬆動。

Apply a small amount of T43 thread lock when fixing a metal part.
Do not use T43 on any plastic part.

螺絲鎖附於金屬件請使用適量T43(螺絲膠)。
請注意T43不可塗在任何的塑膠材質上。

SWASHPLATE/MAIN SHAFT 十字盤組/主軸

60H02

Socket screw
圓頭內六角螺絲(M2x5mm) x 4

Socket Screw
圓頭內六角螺絲(M3x12mm) x 2

Linkage Ball B
球頭B(M3x4)(ϕ 5x12mm) x 6

Long Linkage Ball
導板長球頭 (M3x4) (ϕ 5x28mm) x 1

Bearing
軸承(ϕ3xϕ7x3mm) x 4

Bearing
軸承(ϕ2xϕ5x2.3mm) x 4

Washer
華司(ϕ3xϕ4.8x0.3mm) x 2

Collar
擺臂軸承襯套(ϕ3xϕ4.8x1.5mm) x 2

CAUTION 注 意

Original manufactory packages contains product already assembled, before flying, please check if the screws are fixed with T43.

T43

Apply a small amount of T43 thread lock when fixing a metal part.
Do not use T43 on any plastic part.

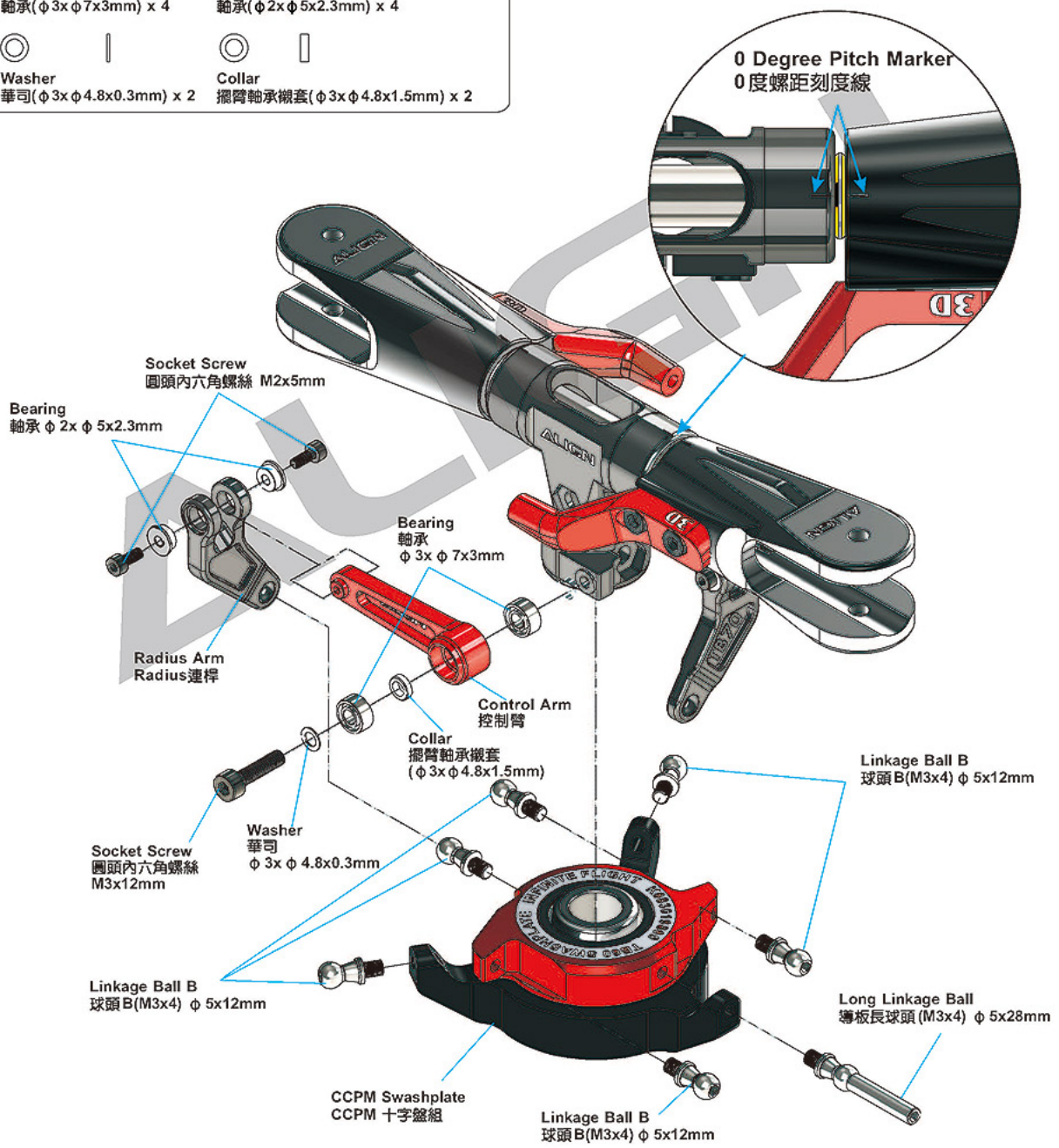

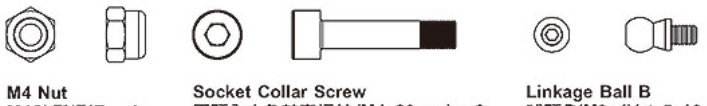

M4 Nut
M4防鬆螺帽 x 2

Socket Collar Screw
圓頭內六角軸套螺絲(M4x20mm) x 2

Linkage Ball B
球頭B(M3x4)(ϕ 5x10.5mm) x 2

CAUTION 注意

Original manufactory packages contains product already assembled, before flying, please check if the screws are fixed with T43.

Apply a small amount of T43 thread lock when fixing a metal part.
Do not use T43 on any plastic part.

60H01-1

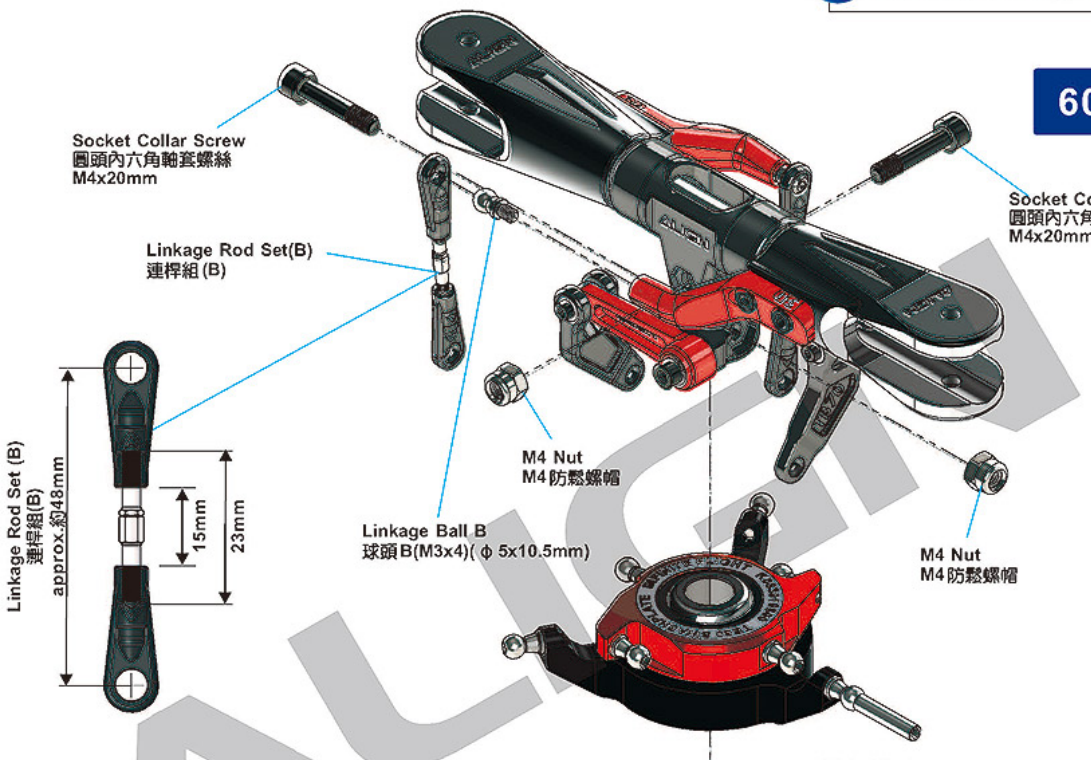

CAUTION 注意

For installation, make sure the "Check Point" is face upward, then use plier or wrench grasp the center of hexagonal rod to adjust its suitable length, turns clockwise to decrease the length, turns counter clockwise to increase the linkage length.

You may adjust the length of ball link to adjust blade tracking.

組裝時請將連桿中間有溝槽辨識端朝上。請使用尖嘴鉗或扳手轉動連桿中間六角柱部位調整適當長度，順時針轉動為調短連桿長度；逆時針轉動則為調長連桿長度。

若飛行中有雙槳情形，可適當調整連桿頭長短改善。

1. Main rotor head and main shaft are wear items; it is recommended to inspect after every 200 flights and replace as necessary. For high headspeed flights, the inspection interval should be reduced to ensure flight safety.
2. Make sure to check and change the parts if any failure due to normal deterioration or mechanical wear to prevent expected danger during high headspeed flight.

1.旋翼頭組及主軸屬於飛行消耗品，建議每200趟定期檢查及更換，請縮短定期檢查之趟數，並確實檢查您的直昇機，以確保飛行安全。

2.若發生人為組裝不當或機件損毀造成模型商品摔機時，請務必詳細確實檢查，強烈建議更換損壞的部件，避免高主旋翼轉速飛行時，發生不可預期的意外。

Optional Equipment
另購品

Swashplate Leveler
十字盤校正器
[H70118]

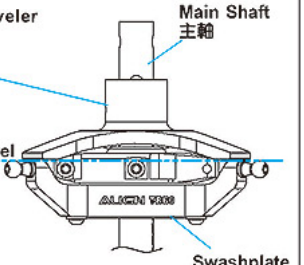

CAUTION 注意

While using Flybarless system, please use the swashplate leveler to calibrate swashplate. Adjust the length of servo linkage rod to make sure the swashplate is leveled before start setting up to ensure the gyro provides the best performance.

使用無平衡系統，請務必使用十字盤調整器校正十字盤，調整伺服器連桿長度，確保十字盤達到水平狀態，再進行基本機體設定，這樣才能確保飛行性能達到最佳效果。

BODY 機身組

60B

It is recommended to use # 800~1000 water sandpaper to polish the edge of the cutting part of the fuselage board. This way could prevent the wires of electronic equipment from being cut.

建議於機身板切割處的邊緣，使用#800~1000水砂紙打磨，可防止電子設備電線被割破。

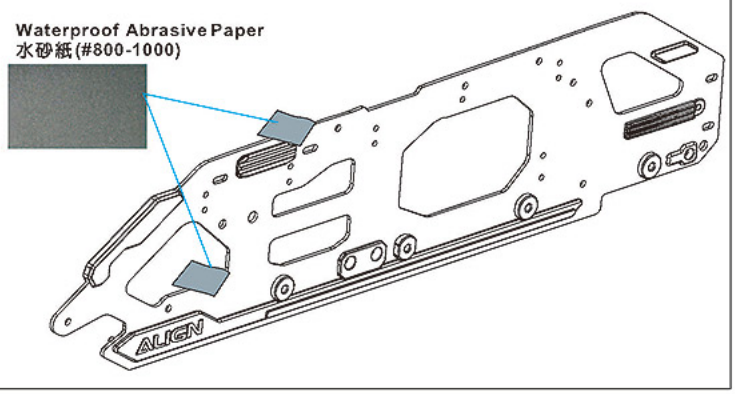

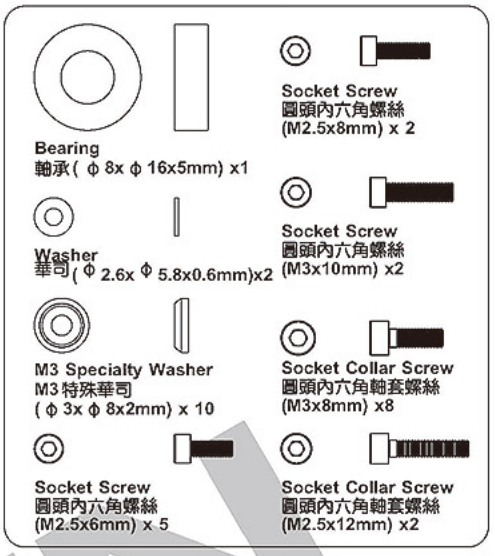

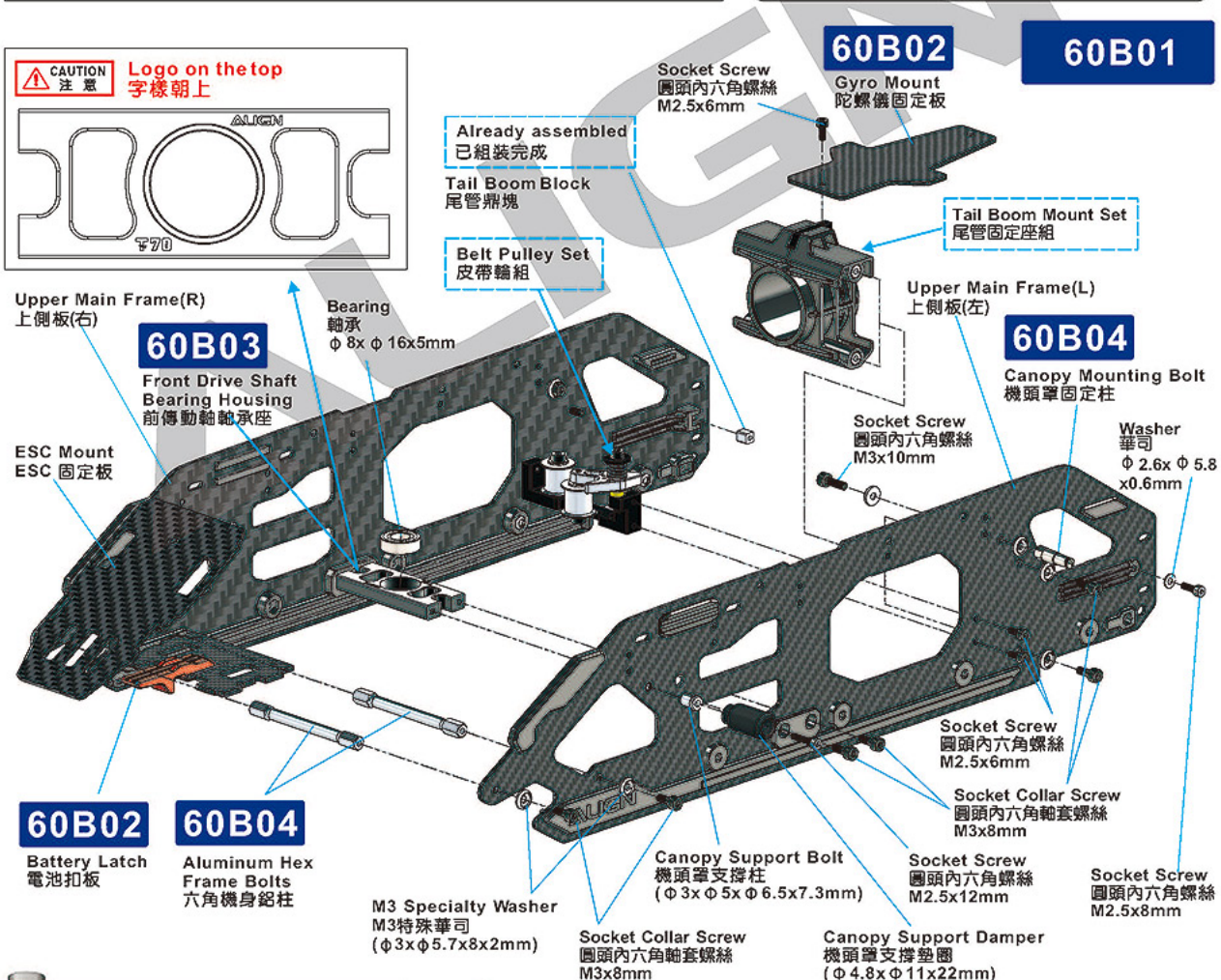

Original manufactory packages contains product already assembled, before flying, please check if the screws are fixed with T43.

Apply a small amount of T43 thread lock when fixing a metal part.
Do not use T43 on any plastic part.

TAIL BOOM MOUNT SET 尾管固定座組

70T01

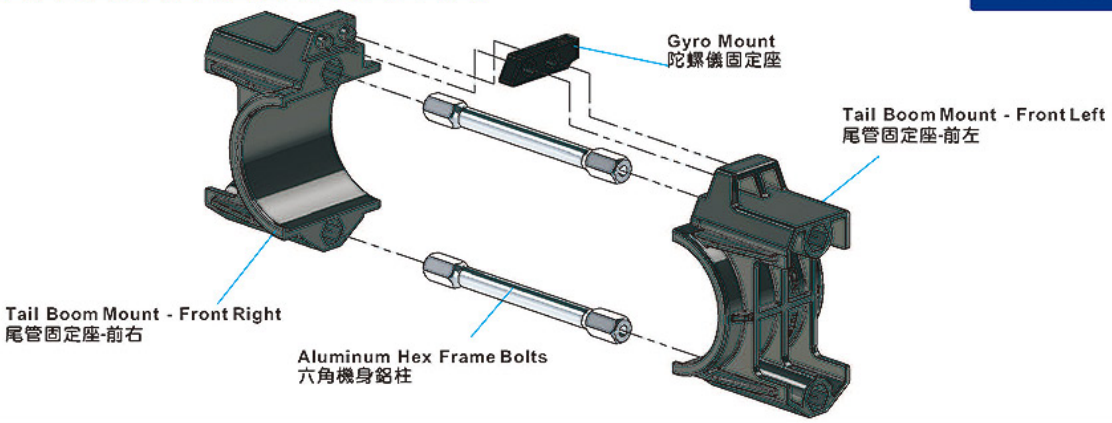

BELT PULLEY SET 皮帶輪組

60B05

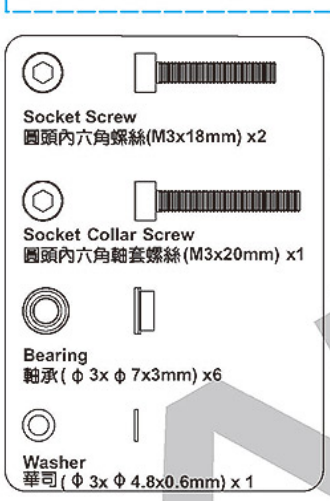

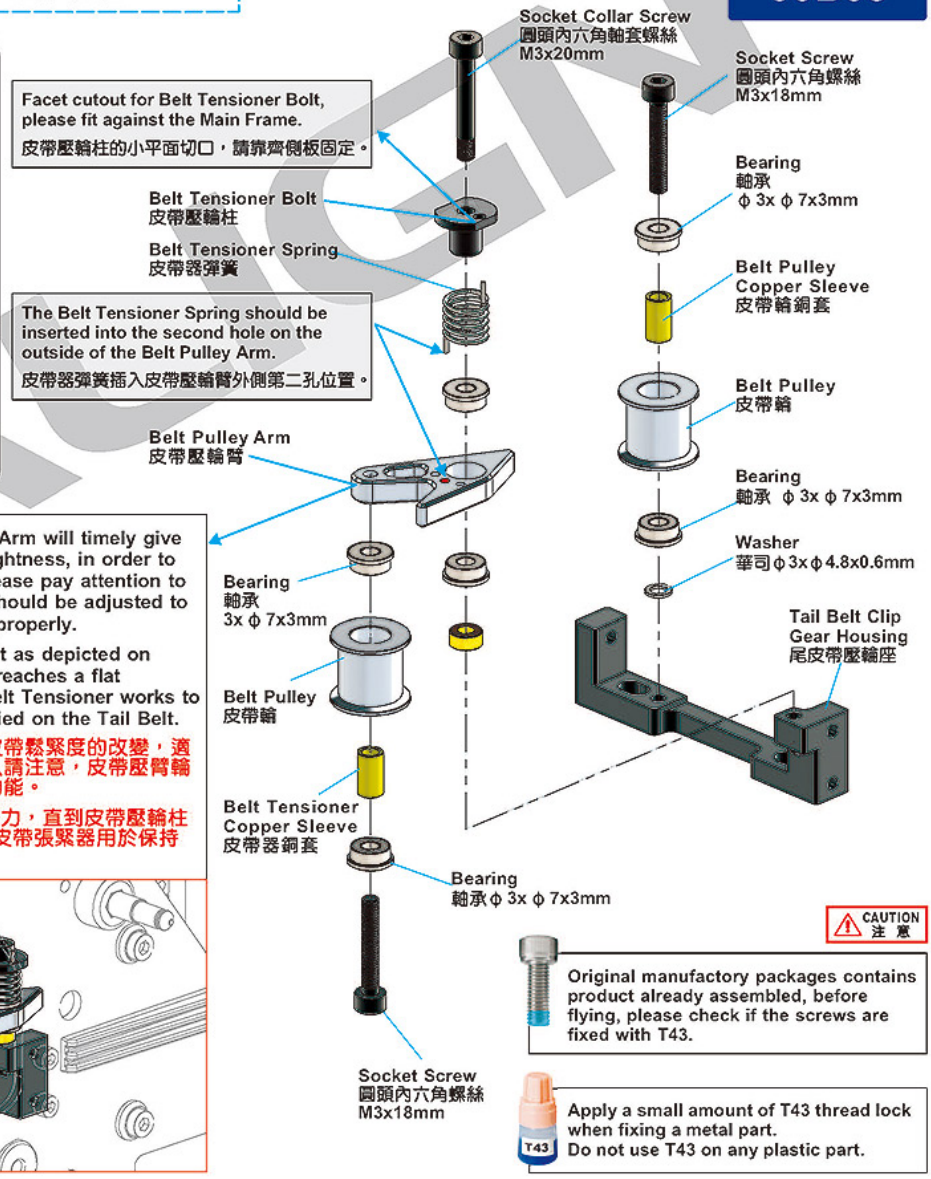

During the flight, the Belt Pulley Arm will timely give pressure according to the belt tightness, in order to make the flight more smooth. Please pay attention to the Belt Pulley Arm position. It should be adjusted to correct rest position to function properly.

Adjust the tension of the Tail Belt as depicted on page 21, until the belt tensioner reaches a flat position. During the flight, the Belt Tensioner works to maintain a constant tension applied on the Tail Belt.

皮帶壓輪臂在飛行過程中，針對皮帶鬆緊度的改變，適時的給予壓力，使飛行順暢。所以請注意，皮帶壓臂輪在靜止的位置，才能確實地發揮功能。

如第 21 頁所述調整尾部皮帶的張力，直到皮帶壓輪柱達到平坦位置。 在飛行過程中，皮帶張緊器用於保持施加在尾帶上的恆定張力。

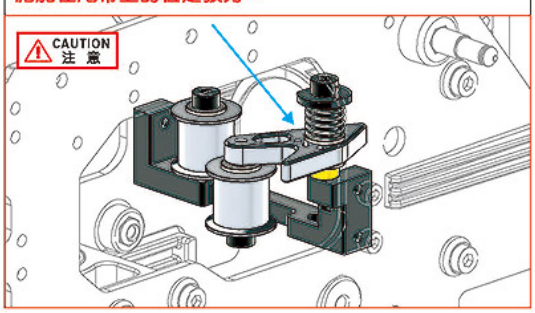

CAUTION 注 意

Original manufactory packages contains product already assembled, before flying, please check if the screws are fixed with T43.

Apply a small amount of T43 thread lock when fixing a metal part.
Do not use T43 on any plastic part.

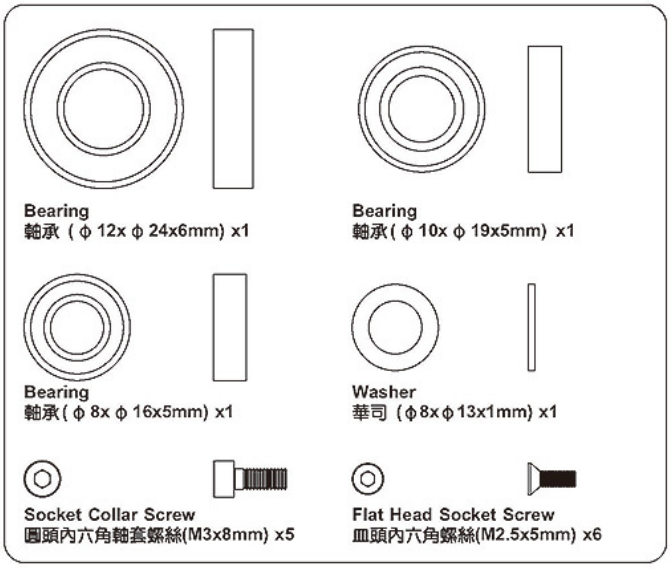

60B06

Belt Pulley Assembly 皮帶輪組 44T

Special lubricating oil (silicone oil) for one-way bearings must be added during assembly. After 60~100 flights, be sure to disassemble and maintain and add lubricating oil to avoid one-way bearings slipping during flight.

組裝時，必須添加單向軸承專用(矽油)潤滑油，每飛行60~100趟後，務必拆開保養並添加潤滑油，以避免飛行中單向軸承產生打滑。

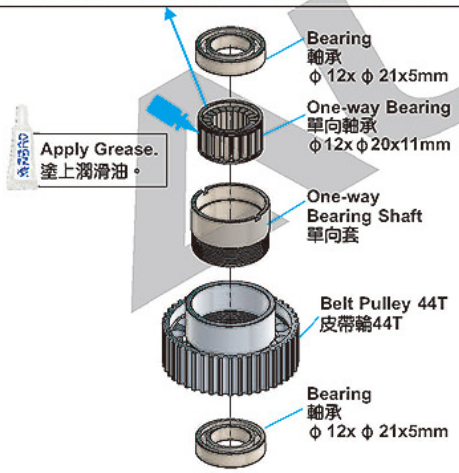

Tail Drive Belt Pulley Assembly 尾傳動皮帶輪組 28T

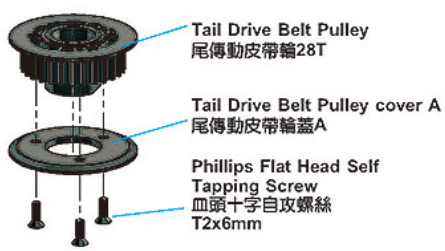

60B03

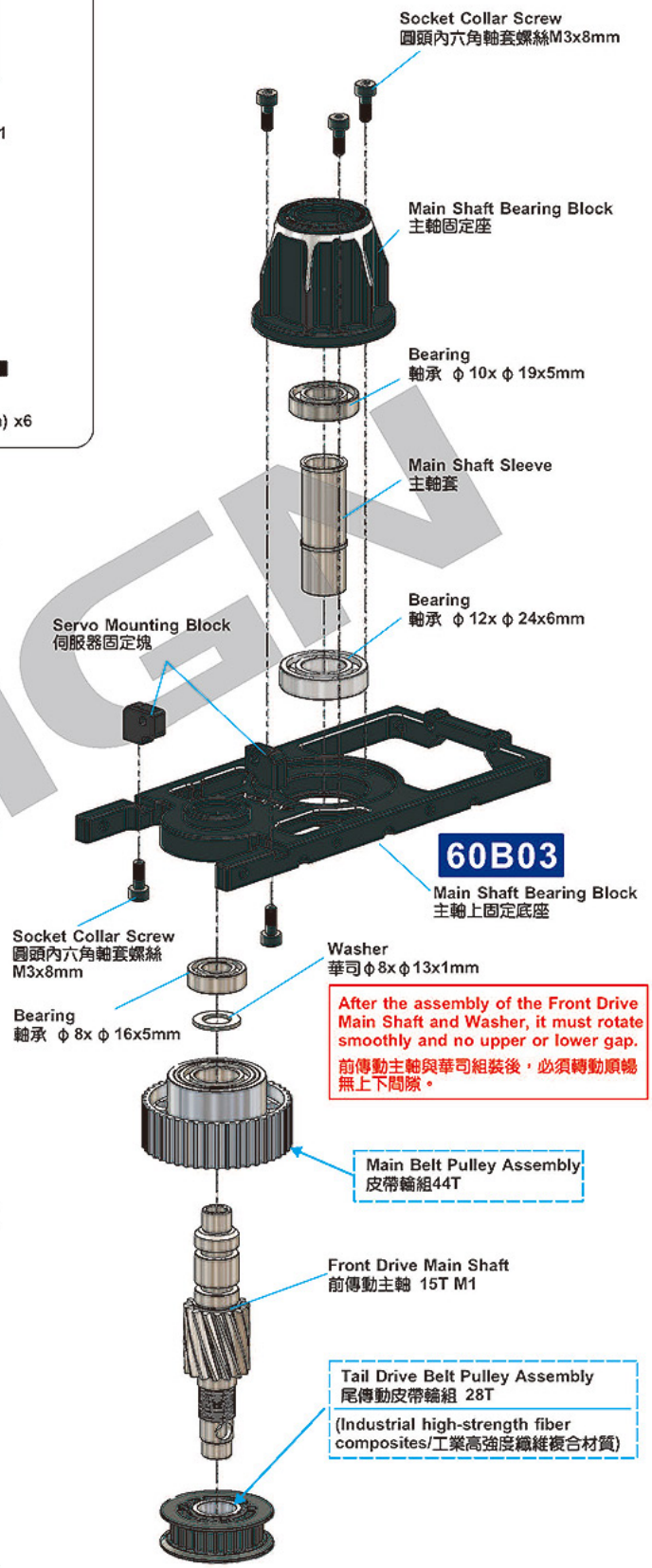

CAUTION 注意

If the spindle gap becomes larger when flights increase, the ϕ8.1xϕ12x0.3mm spindle spacer can be added to ensure smooth rotation without upper and lower gaps.

當飛行次數增加，如有發生主軸間隙變大的現象時，可增加ϕ8.1xϕ12x0.3mm主軸墊片，以確保轉動順暢無上下間隙。

60B03 **60B04**

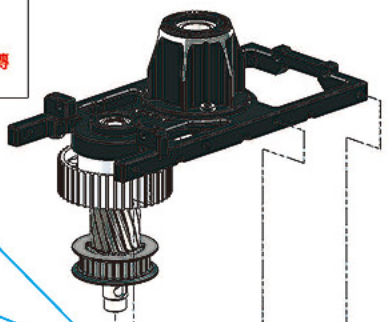

Spare Part:
Main shaft spacer(0.3)
備品:主軸墊片(0.3)

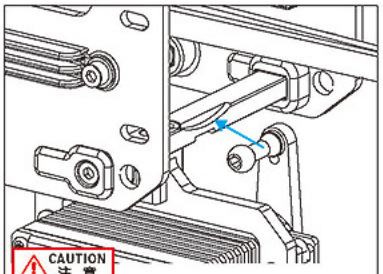

CAUTION 注意

Please note that the laser on the Rudder Servo Mounting Rod must be oriented downwards, while the arc groove should be positioned towards the upper rear side.

請注意！後伺服器固定桿雷刻字樣朝下，圓弧凹槽朝上方後側。

60B06 HTD234-3M Belt
HTD234-3M皮帶

60B06 HTD1800-3M Belt
HTD1800-3M皮帶

Rudder Servo Mounting Rod
後伺服器固定桿

Socket Screw
圓頭內六角螺絲
M2.5x6mm

Socket Screw
圓頭內六角螺絲
M2.5x6mm

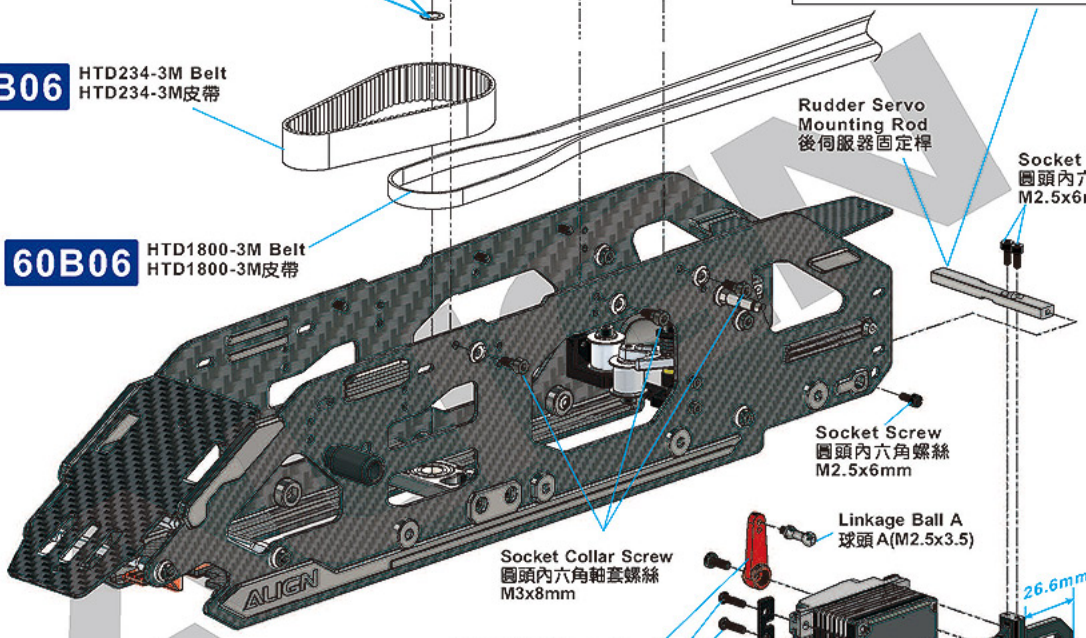

Linkage Ball A
球頭A(M2.5x3.5)

Socket Collar Screw
圓頭內六角軸套螺絲
M3x8mm

26.6mm

D6FF Metal Servo Horn
D6FF 金屬伺服臂(M2.5)

Socket Button Head Self Tapping Screw
半圓頭內六角螺絲
M2.5x10mm

Collar
鋼套

70Z02 Servo Plate
伺服器壓片

Tail Rudder Servo Mount
尾伺服器固定座

Original manufactory packages contains product already assembled, before flying, please check if the screws are fixed with T43.

Apply a small amount of T43 thread lock when fixing a metal part.
Do not use T43 on any plastic part.

Socket Screw
圓頭內六角螺絲 (M2.5x6mm) x6

M3 Specialty Washer
M3特殊華司
(ϕ3x ϕ8x2mm) x 6

Socket Button Head Screw
半圓頭內六角螺絲(M2.5x10mm) x 4

Socket Collar Screw
圓頭內六角軸套螺絲(M3x8mm) x 6

Linkage Ball A
球頭A(M2.5x3.5) x 1

70SD06

DS835M High Voltage Brushless Servo
DS835M高壓無刷伺服器

1520 µs Standard Band /1520 µs 寬頻系統	
Stall Torque/ 輸出扭力	10.0kg.cm(7.4V) 12.5kg.cm(8.4V)
Motion Speed/ 動作速度	0.030sec/60° (7.4V) 0.028sec/60° (8.4V)
Dimension/尺寸	40 x 20 x 39mm
Weight/重量	72g

CAUTION 注意

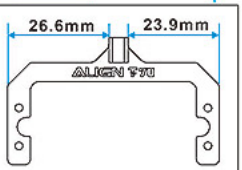

Tail Rudder Servo Mount, the left and right arms have different lengths. The longer side faces the rear of the canopy when assembling.

尾伺服器固定座，左右兩邊臂長不同，組裝時將較長邊朝機身後方。

60B03

DS825M High Voltage Brushless Servo
DS825M 高壓無刷伺服器

1520 μs Standard Band /1520 μs 寬頻系統	
Stall Torque/ 輸出扭力	22.0kg.cm(7.4V) 23.0kg.cm(8.4V)
Motion Speed/ 動作速度	0.060sec/60° (7.4V) 0.055sec/60° (8.4V)
Dimension/尺寸	40 x 20 x 39mm
Weight/重量	80g

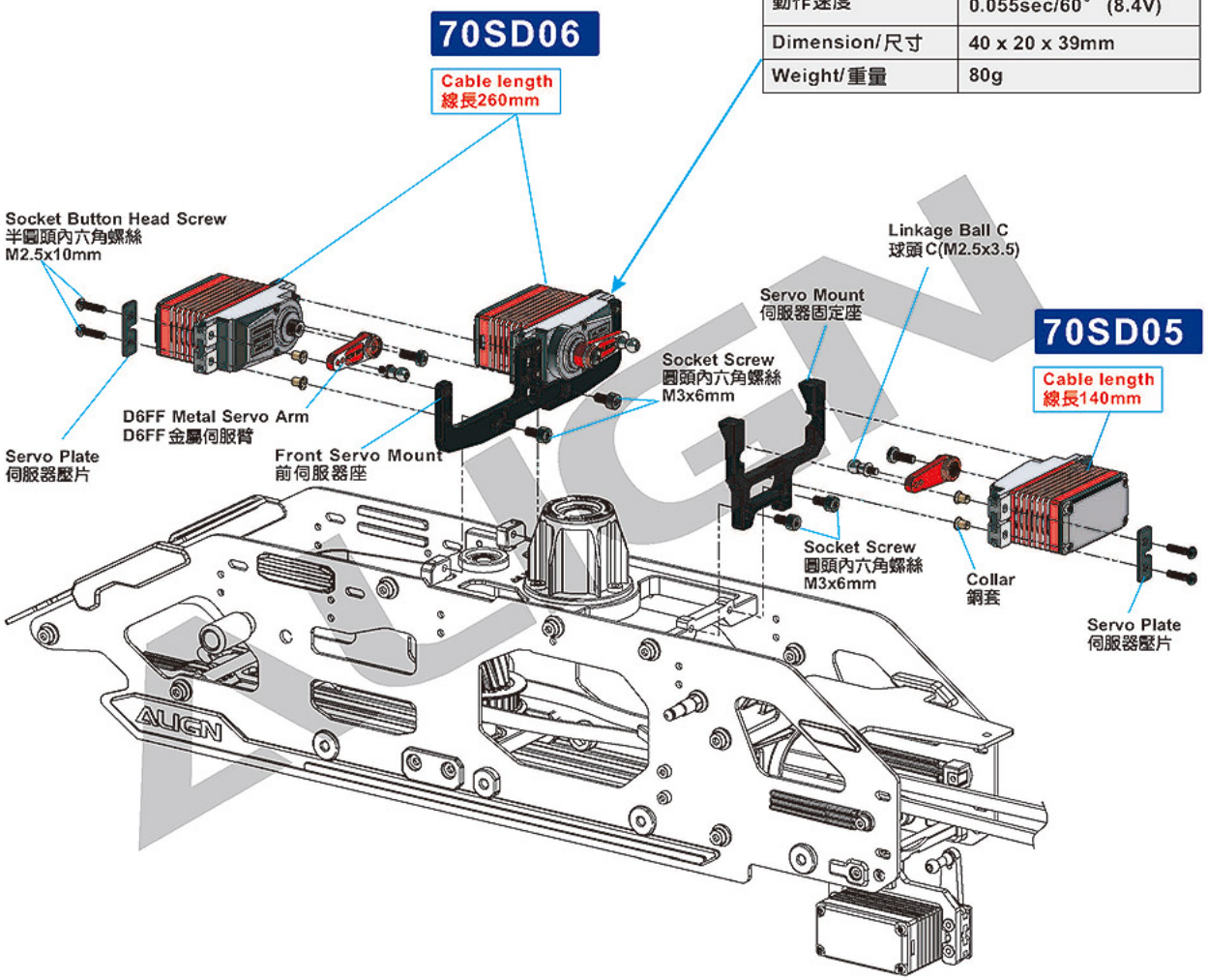

CAUTION 注意

Original manufactory packages contains product already assembled, before flying, please check if the screws are fixed with T43.

Apply a small amount of T43 thread lock when fixing a metal part.
Do not use T43 on any plastic part.

Socket Button Head Screw
半圓頭內六角螺絲 (M2.5x10mm) x 12

Linkage Ball C(M2.5x4)
球頭C(M2.5x4)(ϕ 5x12mm) x 3

Socket Screw
圓頭內六角螺絲(M3x6mm) x4

70B03

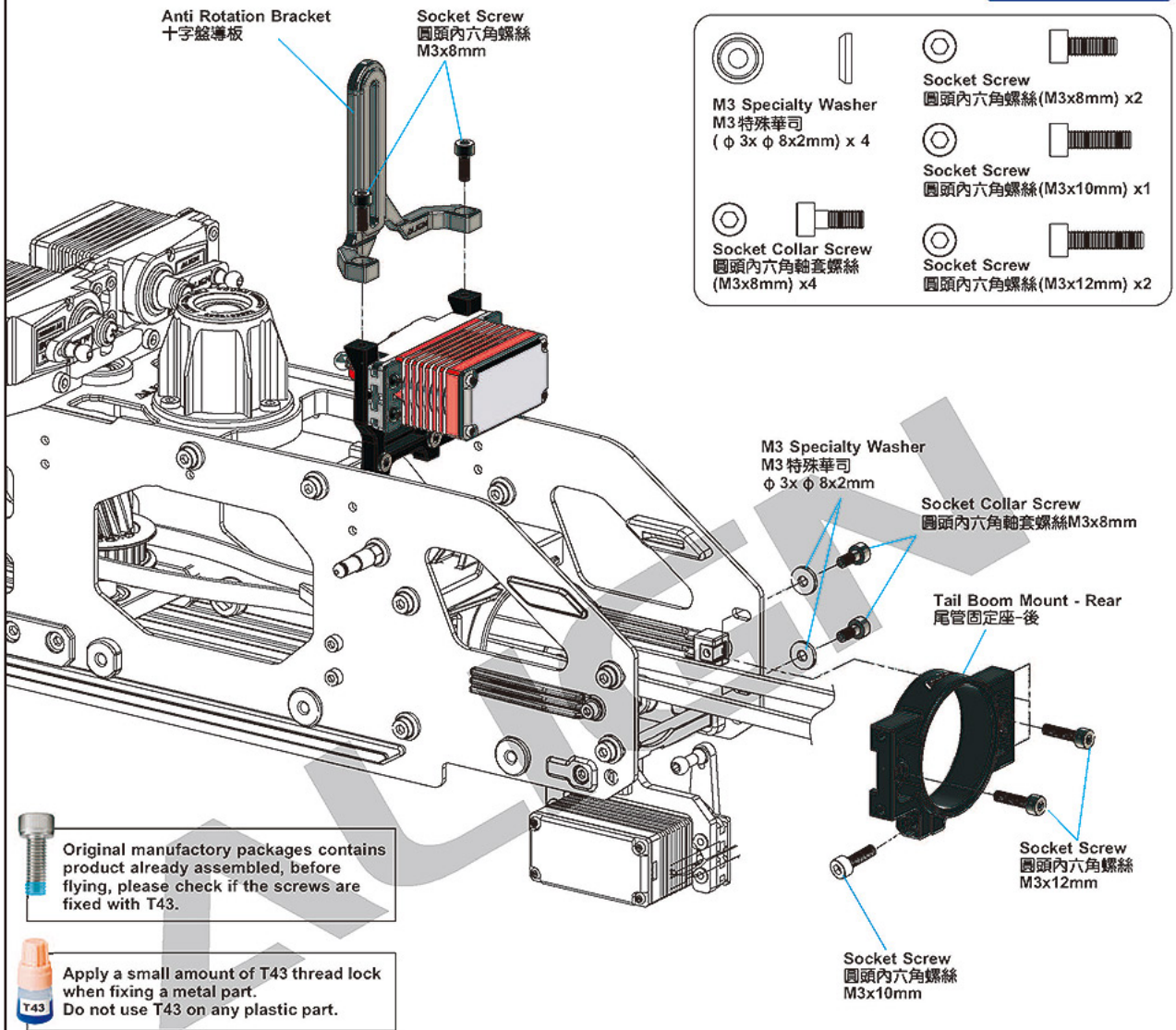

CAUTION 注 意

Main frame assembly key point：

First do not fully tighten the screws of main frames and put two bearings through the main shaft to check if the movements are smooth. The bottom bracket must be firmly touched the level table top(glass surface)；please keep the smooth movements on main shaft and level bottom bracket, then slowly tighten the screws. This assembly can help for the power and flight performance.

機身側板組立重點：

側板螺絲先不完全鎖緊，放入主軸貫穿兩顆軸承確認上下移動必需滑順，主體底板必須與水平桌面（玻璃平面）踏實緊貼；請保持主軸滑順與底板平行桌面後慢慢鎖緊螺絲。正確側板的組裝對動力與飛行性能有顯著幫助。

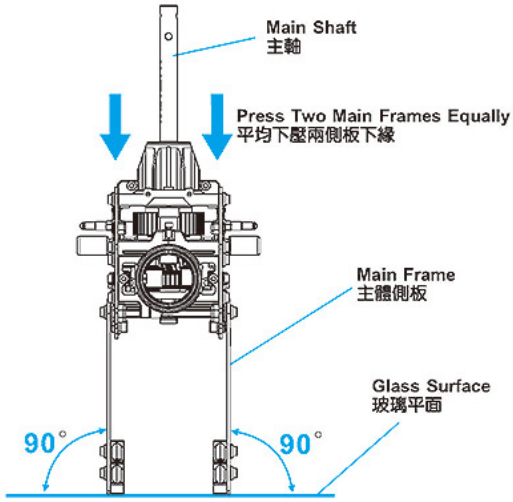

60B03

Socket Screw
圓頭內六角螺絲 (M3x10mm) x 4

Socket Screw
圓頭內六角螺絲 (M3x12mm) x8

M3 Specialty Washer
M3特殊華司 (ϕ 3x ϕ 8x2mm) x 12

CAUTION 注意

Original manufactory packages contains product already assembled, before flying, please check if the screws are fixed with T43.

Apply a small amount of T43 thread lock when fixing a metal part.
Do not use T43 on any plastic part.

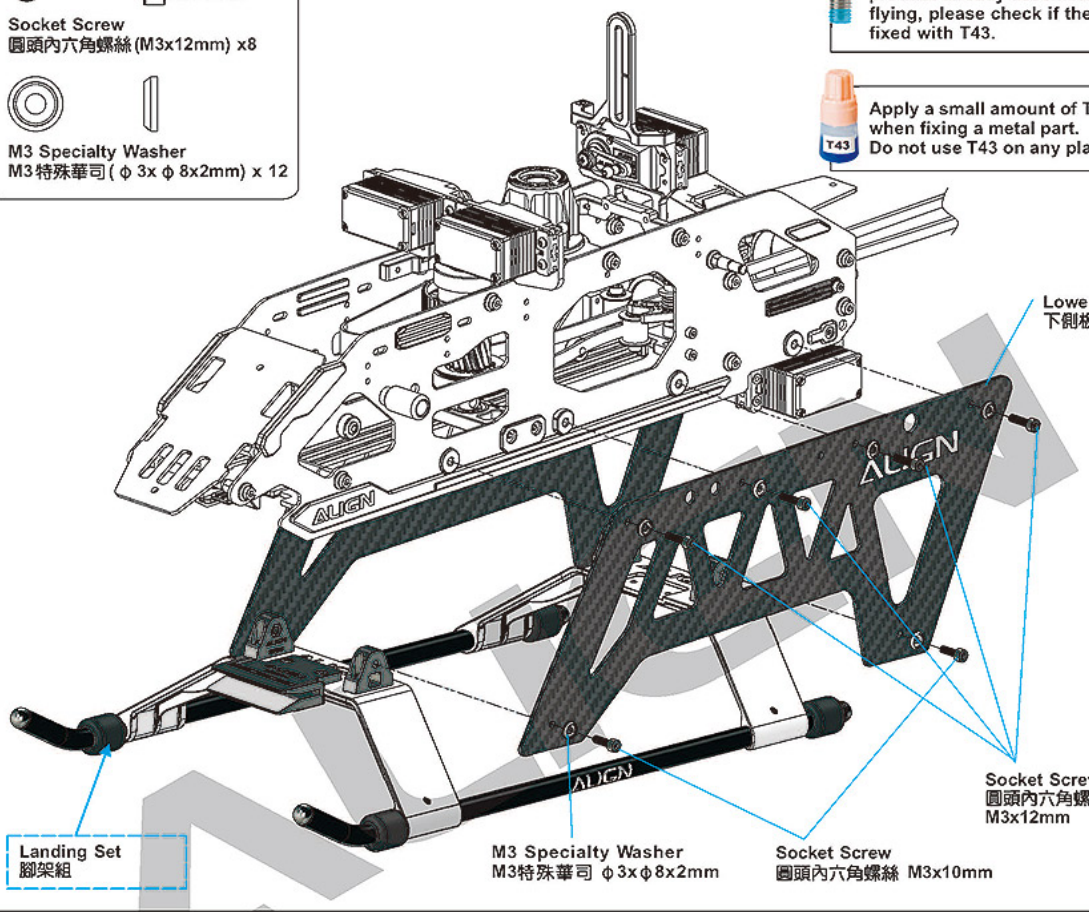

LANDING SET 腳架組

70F01

Socket Screw
圓頭內六角螺絲 (M2.5x8mm) x 2

Socket Screw
圓頭內六角螺絲 (M2.5x10mm) x 8

M3 Set screw
M3 止洩螺絲 (M3x4mm) x 4

60B04
Canopy Clip
機頭壓扣

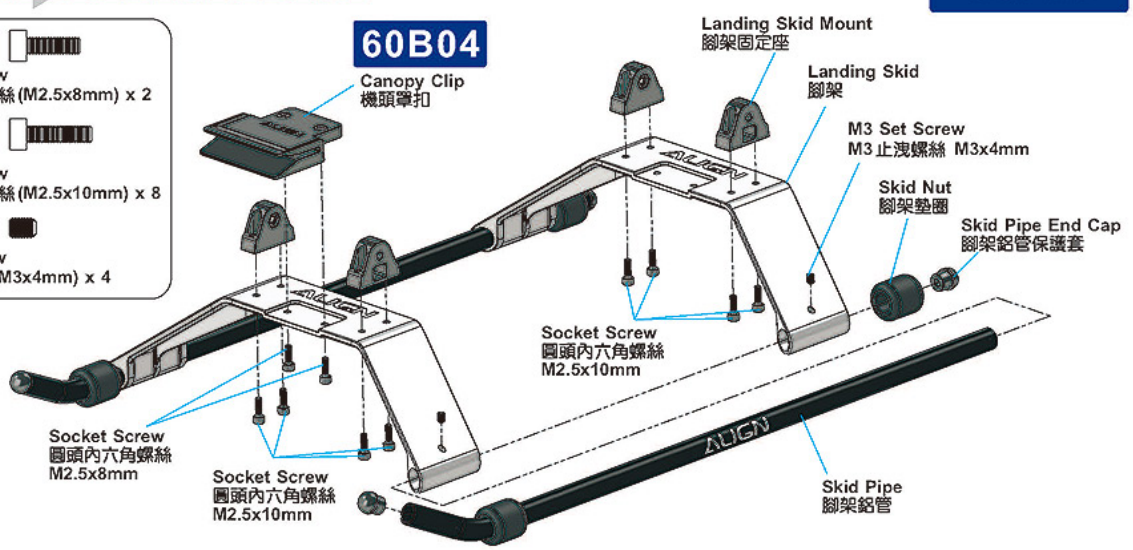

When locking the screw to Motor Belt Pulley, must use the glue and make sure you slightly lock it tight.
鎖附馬達皮帶輪的止洩螺絲時，務必點膠並適當用力鎖緊。

Be sure to align the Motor Belt Pulley Assembly with the groove of the motor spindle, or the belt won't be in a horizontal position.
組裝時，務必將馬達皮帶輪組，對齊馬達心軸的溝槽位置；否則會導致皮帶歪斜。

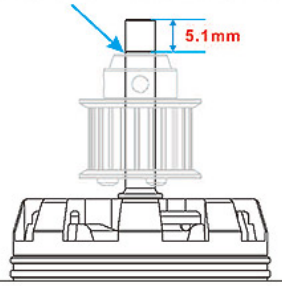

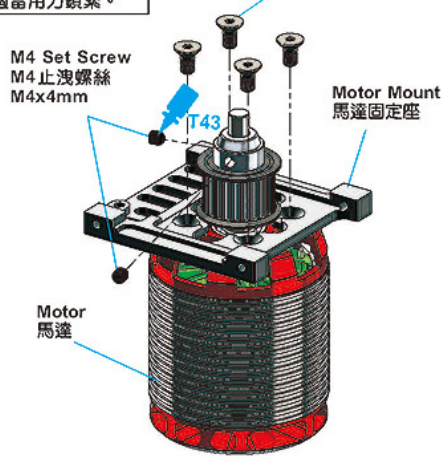

Flat Head Socket Screw
皿頭內六角螺絲(M4X8mm) x4

M4 Set Screw
M4止洩螺絲(M4x4mm) x2

Socket Button Head Screw
半圓頭內六角螺絲(M2x6mm) x3

60B06

Motor Belt Pulley Assembly
馬達皮帶輪組 23T

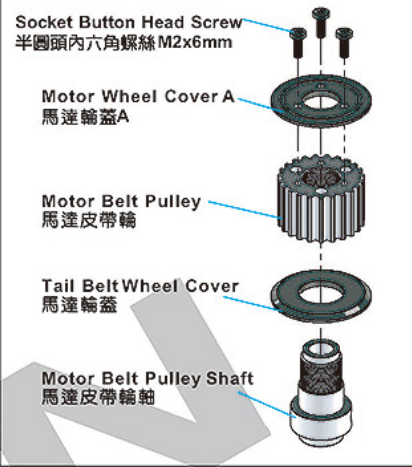

60B03

Motor Belt Pulley 馬達皮帶導輪

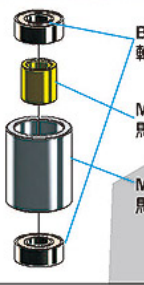

Attention! Please adjust to a proper tightness when assembling Motor Drive Belt. If it's too loose, it will easily cause the pulley to slip. Also pay attention to tighten the screws of the motor mount.
請注意！馬達傳動皮帶，組裝時請調整適當緊度，過鬆容易導致皮帶輪打滑，並注意鎖緊馬達座螺絲。

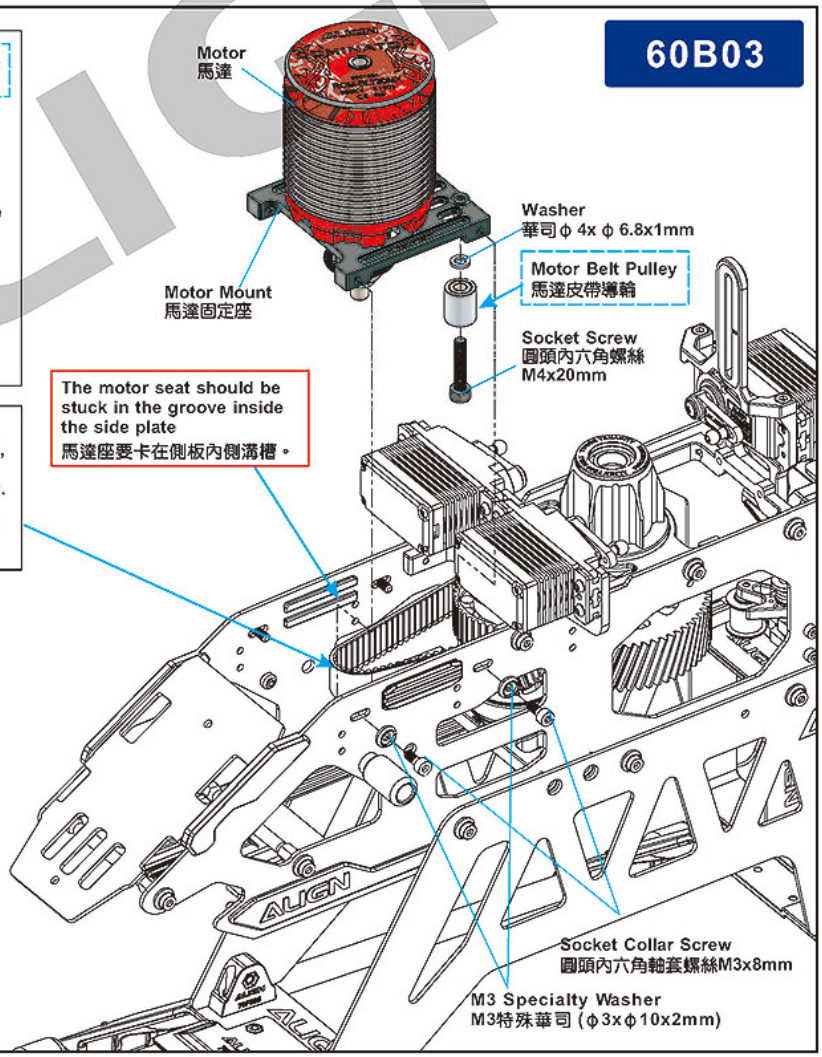

Bearing
軸承
(ϕ 4x ϕ 8x3mm) x 2

Washer
華司
(ϕ 4x ϕ 6.8x1mm) x1

M3 Specialty Washer
M3特殊華司
(ϕ 3x ϕ 10x2mm) x 4

Socket Screw
圓頭內六角螺絲
(M3x8mm) x 4

Socket Screw
圓頭內六角螺絲(M4x20mm) x1

ALIGN

TAIL 尾部組

60T

When assembling the tail boom ensure the boom is properly installed in the tail boom mount and check to make sure belt is in the correct position.
尾管組裝時必須確實頂住尾管固定座，以確保皮帶調整位置正確。

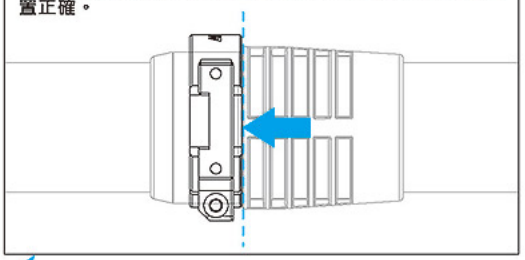

CAUTION 注意

Original manufactory packages contains product already assembled, before flying, please check if the screws are fixed with T43.

Apply a small amount of T43 thread lock when fixing a metal part.
Do not use T43 on any plastic part.

60T02

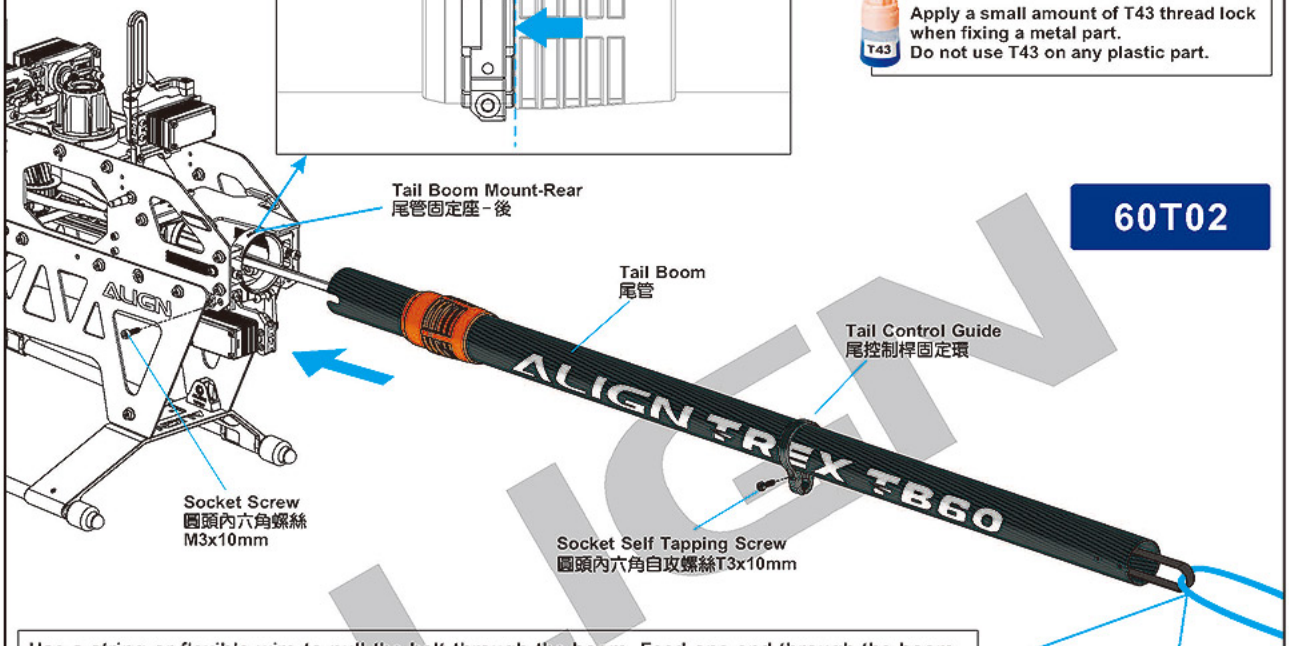

Use a string or flexible wire to pull the belt through the boom. Feed one end through the boom, loop through belt and feed back through the boom. Gently pull both ends of the string or wire until the belt is completely pulled through the boom. Please refer to the diagram below. Confirm the belt is installed correctly and not turned more than 90 degrees. Improper installation of the belt can result in serious damage to the helicopter or people.
建議使用鐵絲或繩子拉緊皮帶的另一端將皮帶穿過尾管，皮帶組裝方向請依下方尾傳動皮帶裝配圖示安裝，確認皮帶組裝方向正確，否則將發生不可預期的危險。

DRIVE BELT ILLUSTRATION
尾傳動皮帶裝配圖示

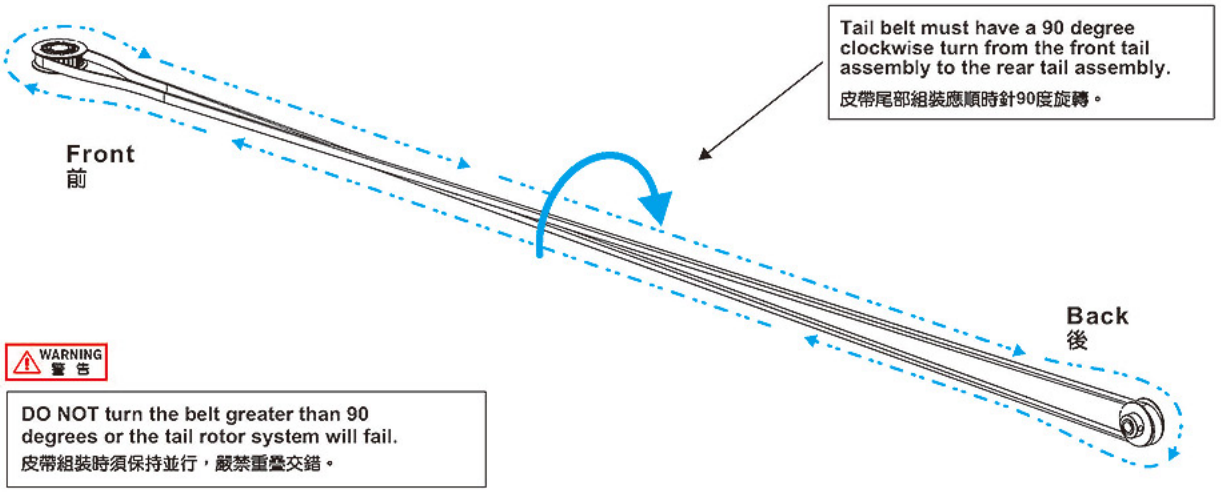

Tail belt must have a 90 degree clockwise turn from the front tail assembly to the rear tail assembly.
皮帶尾部組裝應順時針90度旋轉。

WARNING 警告

DO NOT turn the belt greater than 90 degrees or the tail rotor system will fail.
皮帶組裝時須保持並行，嚴禁重疊交錯。

60T01

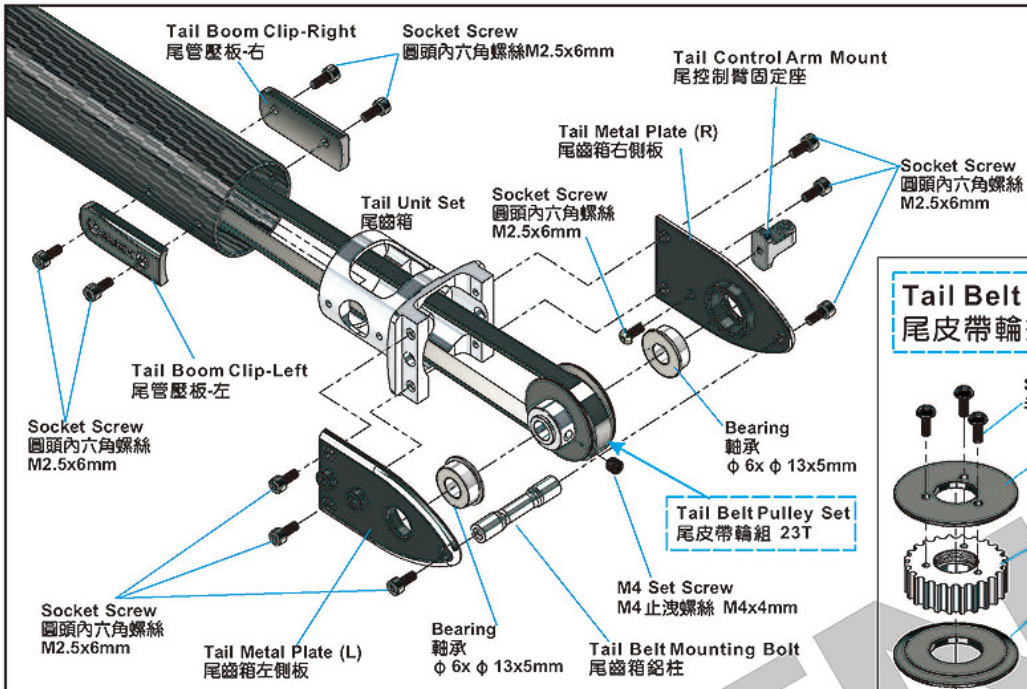

Original manufactory packages contains product already assembled, before flying, please check if the screws are fixed with T43.

Apply a small amount of T43 thread lock when fixing a metal part.
Do not use T43 on any plastic part.

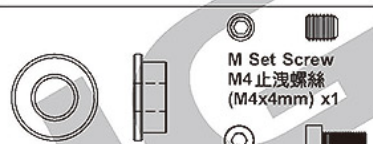

Tail Belt Pulley Set 尾皮帶輪組 23T

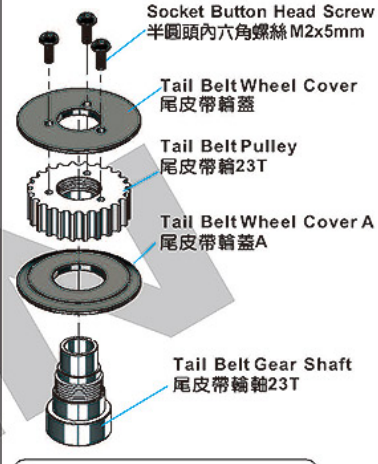

Socket Button Head Screw
半圓頭內六角螺絲 (M2x5mm) x 3

Tail Pitch Control Set 尾控制組

60T01

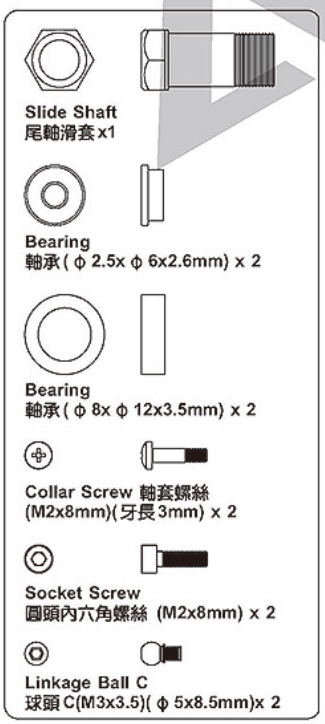

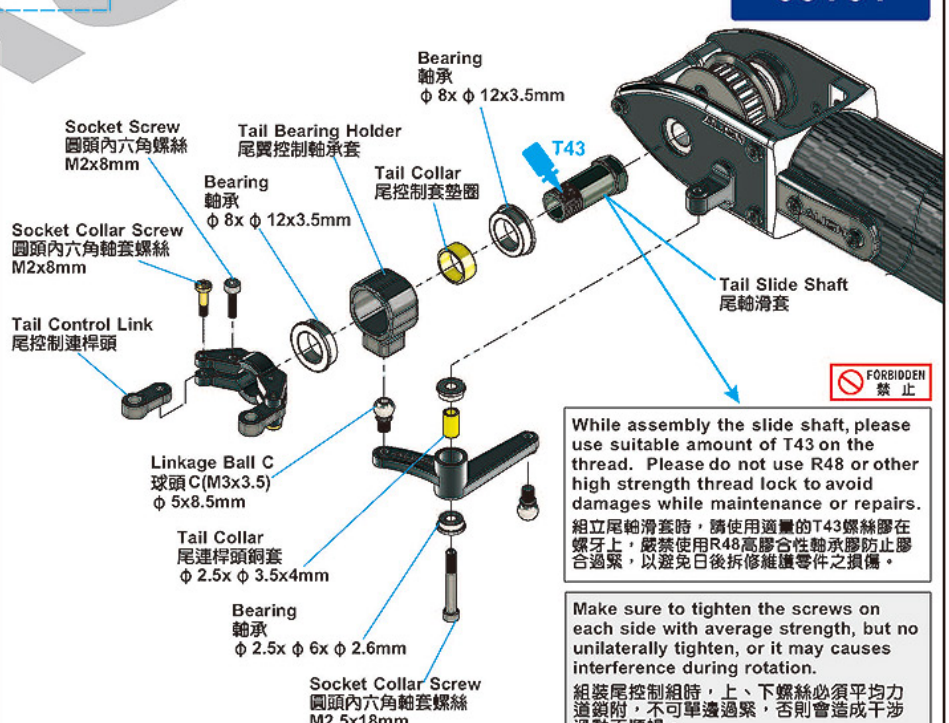

FORBIDDEN 禁止

While assembly the slide shaft, please use suitable amount of T43 on the thread. Please do not use R48 or other high strength thread lock to avoid damages while maintenance or repairs.
組立尾軸滑套時，請使用適量的T43螺絲膠在螺牙上，嚴禁使用R48高膠合性軸承膠防止膠合過緊，以避免日後拆修維護零件之損傷。

Make sure to tighten the screws on each side with average strength, but no unilaterally tighten, or it may causes interference during rotation.
組裝尾控制組時，上、下螺絲必須平均力道鎖附，不可單邊過緊，否則會造成干涉滑動不順暢。

60T03

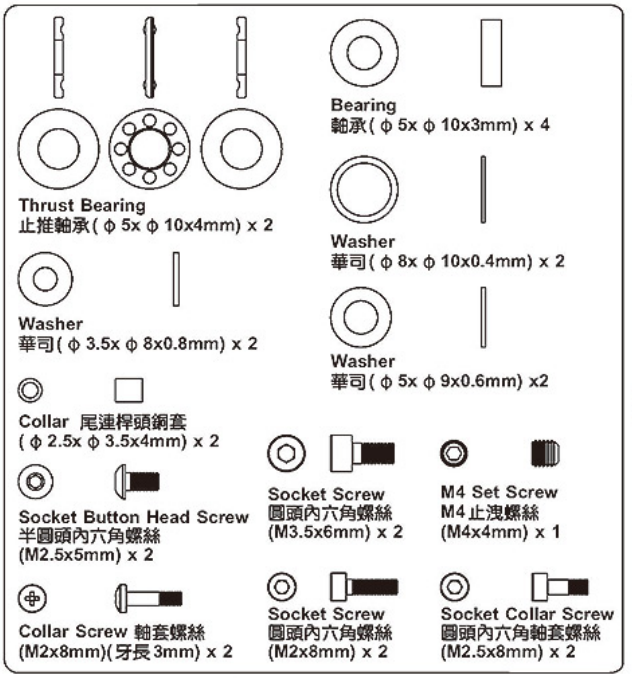

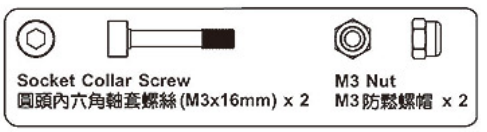

Original manufactory packages contains product already assembled, before flying, please check if the screws are fixed with T43.

Apply a small amount of T43 thread lock when fixing a metal part.
Do not use T43 on any plastic part.

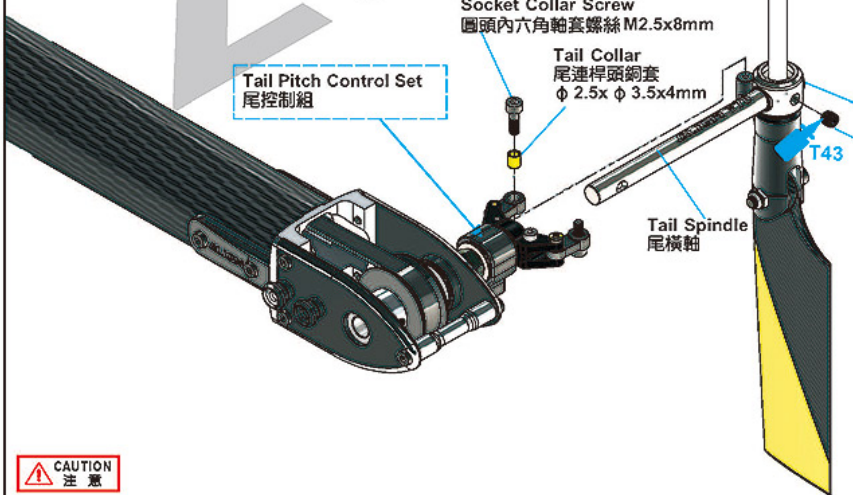

CAUTION 注意

The Metal Tail Rotor Holder is assembled at the factory, make sure to apply little thread lock on screws and tighten them back appropriately before starting to fly. Suggest to use torque wrench or torque lock for tightening screws with the torque value 5.0kg.cm.

尾旋翼夾座出廠為假組裝，螺絲必須使用適量螺絲膠重新鎖附，鎖附需注意適當緊度即可，建議搭配扭力或扭力機鎖附，扭力值為5.0kg.cm。

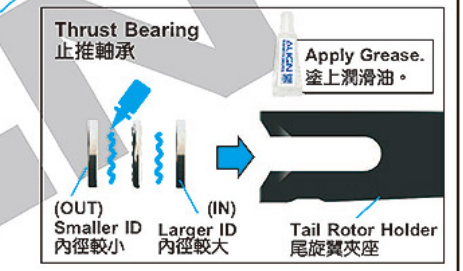

When assembling the metal washer on the tail T-shaped Mount, the sharp side should face outward and not face the Spindle washer, otherwise the spindle washer will be easily scratched.

尾T座在組裝金屬華司時，銳利面要朝外，不能朝向橫軸墊圈，否則容易將橫軸墊圈刮損。

CAUTION 注意

Make sure to tighten the screws on each side with average strength, but no unilaterally tighten, or it may causes interference during rotation.

組裝尾控制組時，上、下螺絲必須平均力道鎖附，不可單邊過緊，否則會造成干涉滑動不順暢。

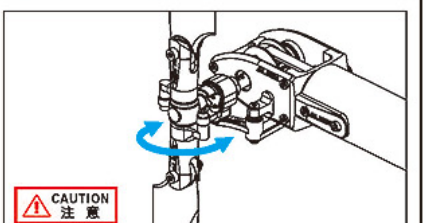

CAUTION 注意

After complete the tail rotor assembly, please check if it rotates smoothly.

尾旋翼組組裝完成後需確認尾旋翼夾座轉動滑順

CAUTION 注意

Aim tail rotor hub at the concave of the tail spindle and apply thread lock on the set screw. The tail rotor hub and screws are wear items, and thus should be inspected for replacement after every 100 flights. For flights with high head speed, the inspection interval should be reduced to ensure flight safety.

尾旋翼T型座瞄準尾橫軸的凹刻並鎖上，請確認止洩螺絲上膠。 尾旋翼T型座和螺絲屬於飛行消耗品，建議每100 趟定期檢查及更換，高主旋翼轉速飛行時，請縮短定期檢查之趟數，以確保飛行安全。

60B06

CAUTION 注意

Original manufactory packages contains product already assembled, before flying, please check if the screws are fixed with T43.

Apply a small amount of T43 thread lock when fixing a metal part.
Do not use T43 on any plastic part.

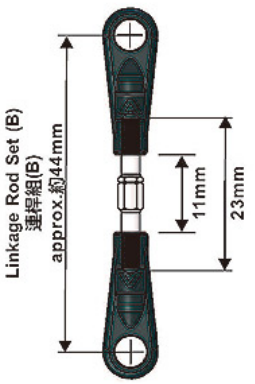

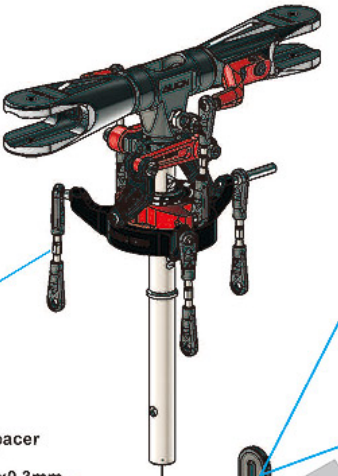

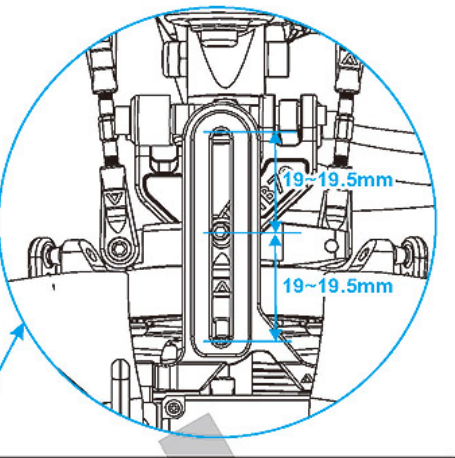

When the Swashplate is adjusted horizontally (0 degree), the Swashplate Linkage Rod must be centered at the midpoint of the Anti Rotation Bracket, and the center distance on one side is about 19-19.5mm. If the offset is large and a large cycle pitch is set .There might be a travel interference.

十字盤調整水平(0度)時，十字盤連桿必須置中在十字盤導板中點位置，單邊中心距離約19~19.5mm，如果偏移量大且設較大循環螺距時，可能有行程干涉。

Main shaft spacer
主軸墊片
ϕ 10.1x ϕ 14x0.3mm

Spare part：
Main shaft spacer(0.5)
備品：主軸墊片 (0.5)
ϕ 10.1x ϕ 14x0.5mm

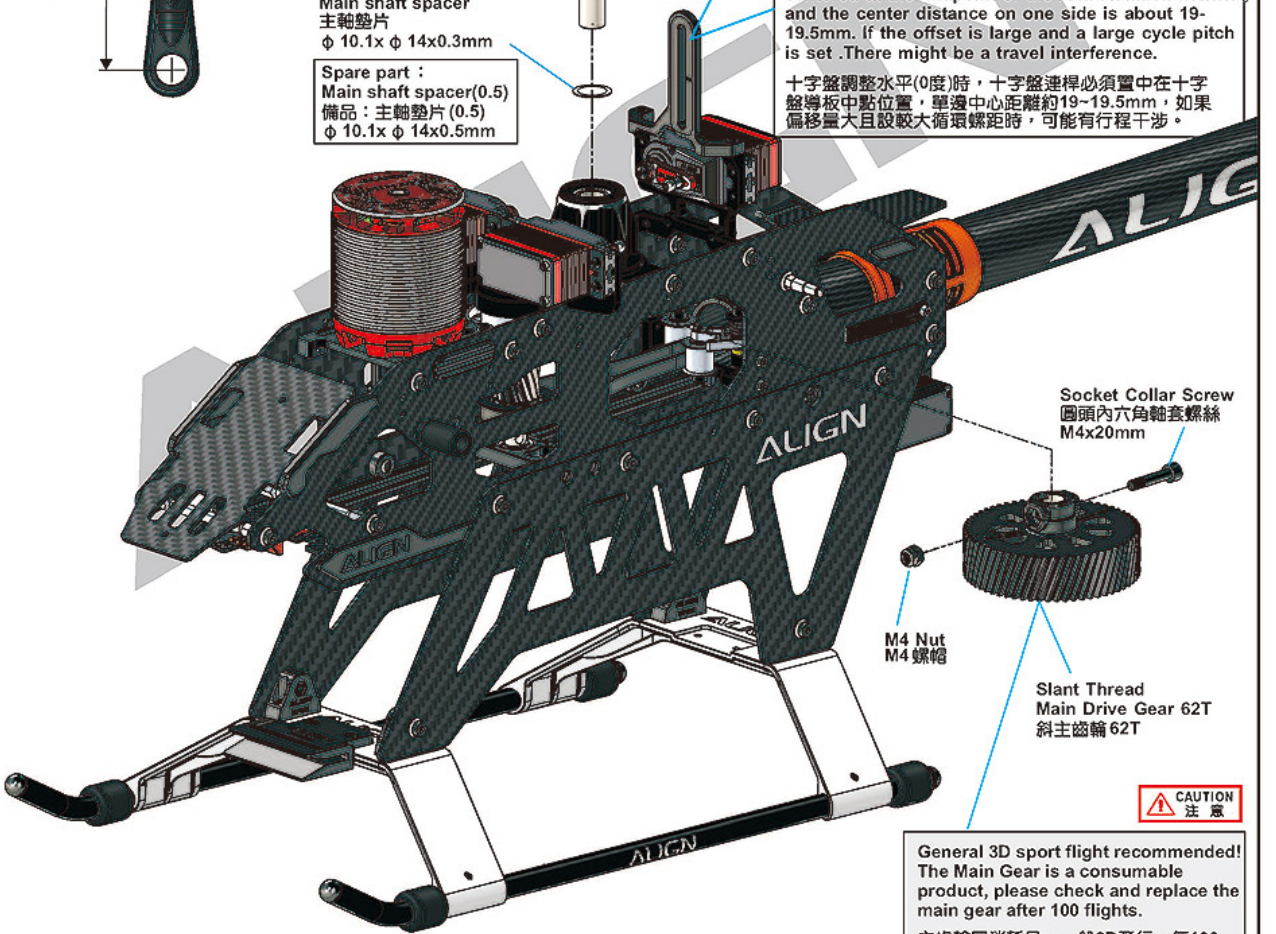

Socket Collar Screw
圓頭內六角軸套螺絲
M4x20mm

M4 Nut
M4 螺帽

Slant Thread
Main Drive Gear 62T
斜主齒輪 62T

CAUTION 注意

General 3D sport flight recommended! The Main Gear is a consumable product, please check and replace the main gear after 100 flights.

主齒輪屬消耗品，一般3D飛行，每100趟，建議！注意檢查並更換新齒輪。

CAUTION 注意

Install the main shaft into the main drive gear after the belt has been installed, then align main shaft with the main shaft mounting sleeve, insert screw and tighten. DO NOT over tighten as this may cause damage of main shaft mounting sleeve.

請將組裝完成之主軸穿入已裝好皮帶的斜主齒輪組，穿入後對準主軸固定套上的孔位鎖附。並以適當扭力鎖附即可，過度鎖緊易造成主軸固定套滑牙。

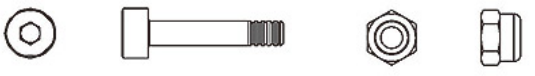

Socket Collar Screw
圓頭內六角軸套螺絲 (M4x20mm) x 1

M4 Nut
M4 防鬆螺帽 x 1

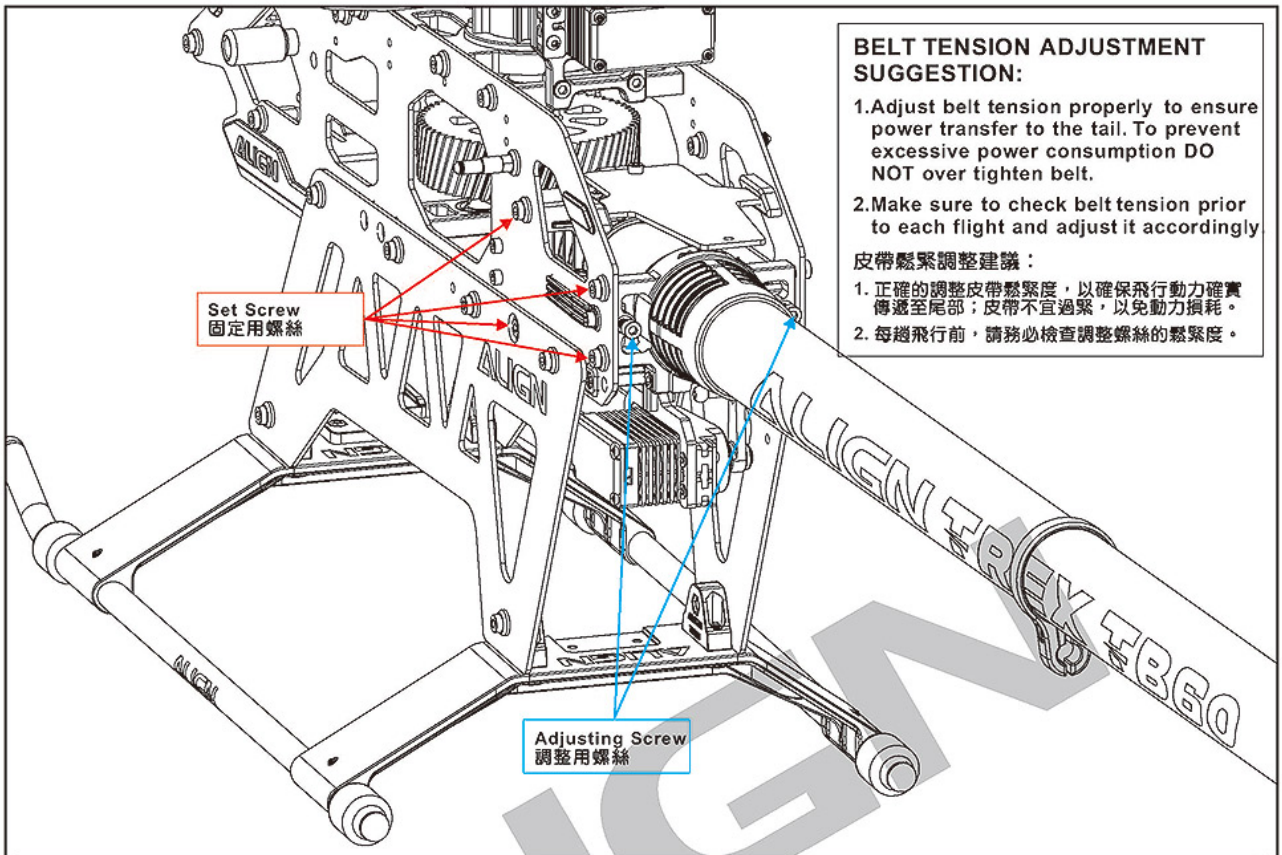

BELT TENSION ADJUSTMENT SUGGESTION:

1. Adjust belt tension properly to ensure power transfer to the tail. To prevent excessive power consumption DO NOT over tighten belt.
2. Make sure to check belt tension prior to each flight and adjust it accordingly

皮帶鬆緊調整建議：

1. 正確的調整皮帶鬆緊度，以確保飛行動力確實傳遞至尾部；皮帶不宜過緊，以免動力損耗。
2. 每趟飛行前，請務必檢查調整螺絲的鬆緊度。

PATENTED DESIGN 專利設計

ADJUSTABLE BELT TENSION DESIGN／可調節皮帶張力設計

The Upper Main Frame cleverly inserts a rail, simply by turning a few screws, then allows the belt tension to adjust conveniently.
上側板巧妙地嵌入軌道，只需轉動幾個螺絲，即可方便地調節皮帶張力。

ADJUSTING WAY 調整方式

CAUTION 注意 Make sure to check belt tension prior to each flight and adjust accordingly. Both sides must be rotated equally.
注意：調整時務必將兩側的調整螺絲同時放鬆或鎖緊。

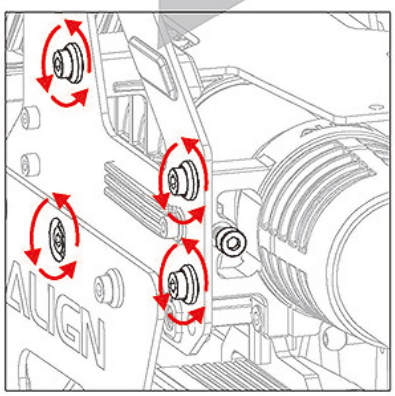

1. First loosen the screws on the two sides of the Upper Main Frame.

1. 先鬆開機身上側板外兩邊的固定螺絲。

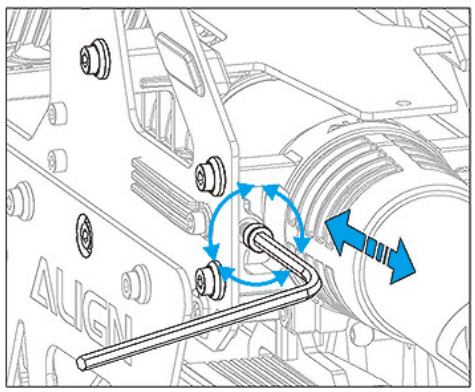

2. Then adjust the adjustment screw in the side of the Upper Main Frame to the proper position. When the screw is locked, the tail pipe will tighten the belt backward, and if it is loosened, the tail pipe will loosen the belt forward.

2. 再將機身上側板內的調整螺絲調整至適當位置。
螺絲鎖緊時，尾管固定座及尾管往後拉緊皮帶，
螺絲鬆開時，尾管固定座及尾管往前放鬆皮帶。

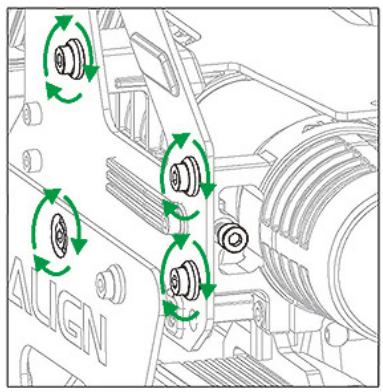

3. After adjusting to the proper tightness, tighten the fixing screw.

3. 調至適當鬆緊度後，再將固定螺絲鎖緊即可。

CAUTION 注 意

When tightening the main blade fixing screw, please tighten it firmly, but not over tighten, or it may cause the damage of main blade holder and result in danger.

鎖緊主旋翼螺絲須注意適當緊度即可，過緊可能導致主旋翼夾座受損，飛行意外發生。

60H01-1

Main Blade Fixing Screw
鎖主旋翼用螺絲

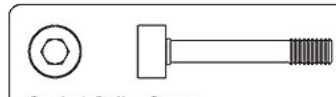

Socket Collar Screw
圓頭內六角軸套螺絲(M4x25mm) x 2

M4 Nut
M4防鬆螺帽 x 2

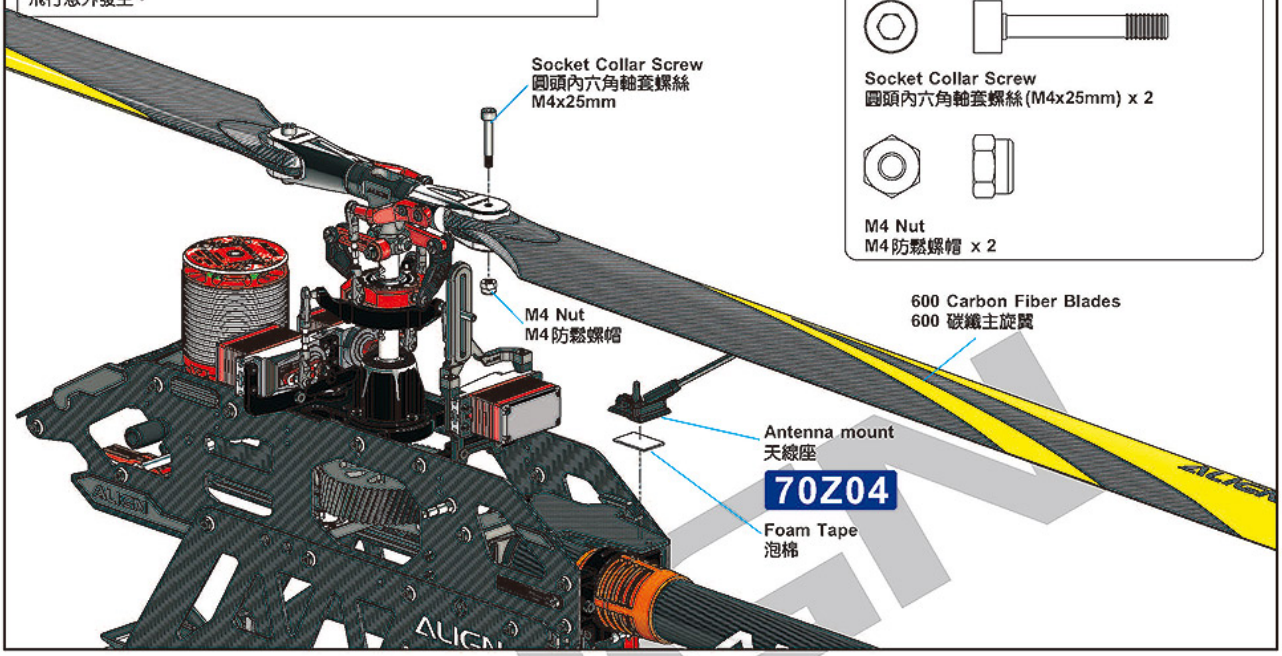

60T02 60T04

Ball Link
連桿頭 x 2

Socket Screw
圓頭內六角螺絲(M3x6mm) x2

M3 Specialty Washer
M3特殊華司 (ϕ 3x ϕ 8x2mm) x 2

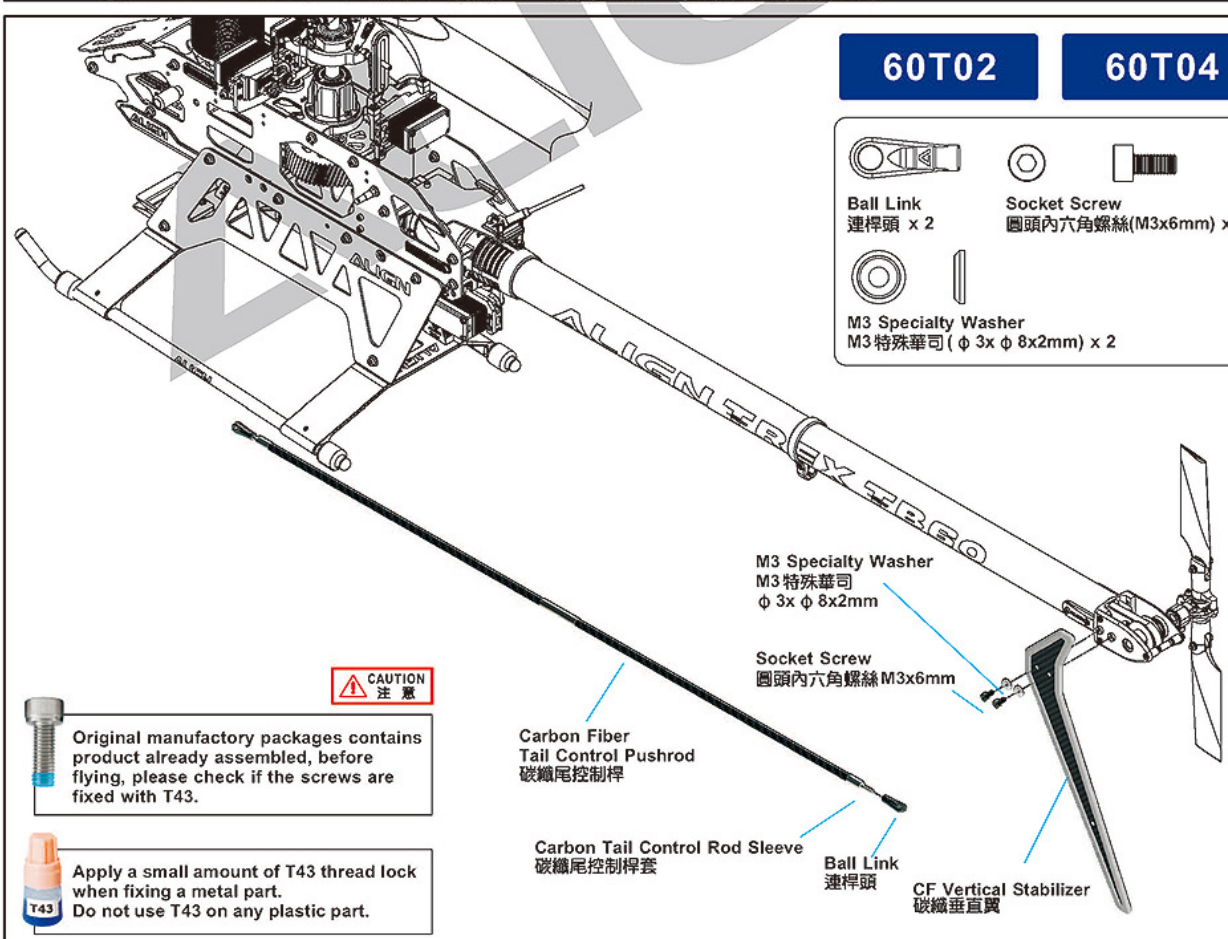

CAUTION 注 意

Original manufactory packages contains product already assembled, before flying, please check if the screws are fixed with T43.

T43

Apply a small amount of T43 thread lock when fixing a metal part.
Do not use T43 on any plastic part.

ELECTRONIC EQUIPMENT ILLUSTRATION
電子設備建議配置圖示

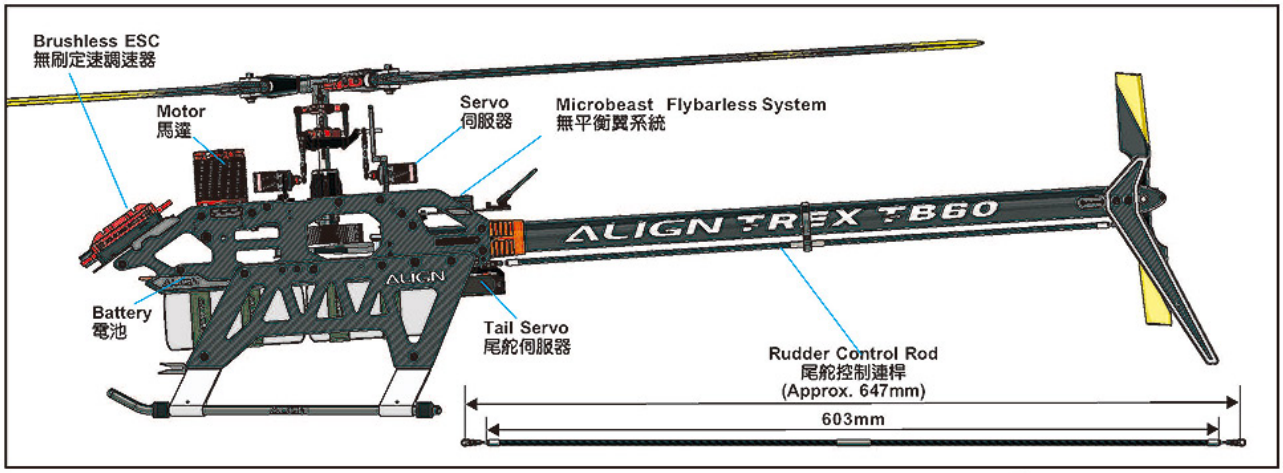

ESC AND SERVO WIRING ILLUSTRATION 接線示意圖

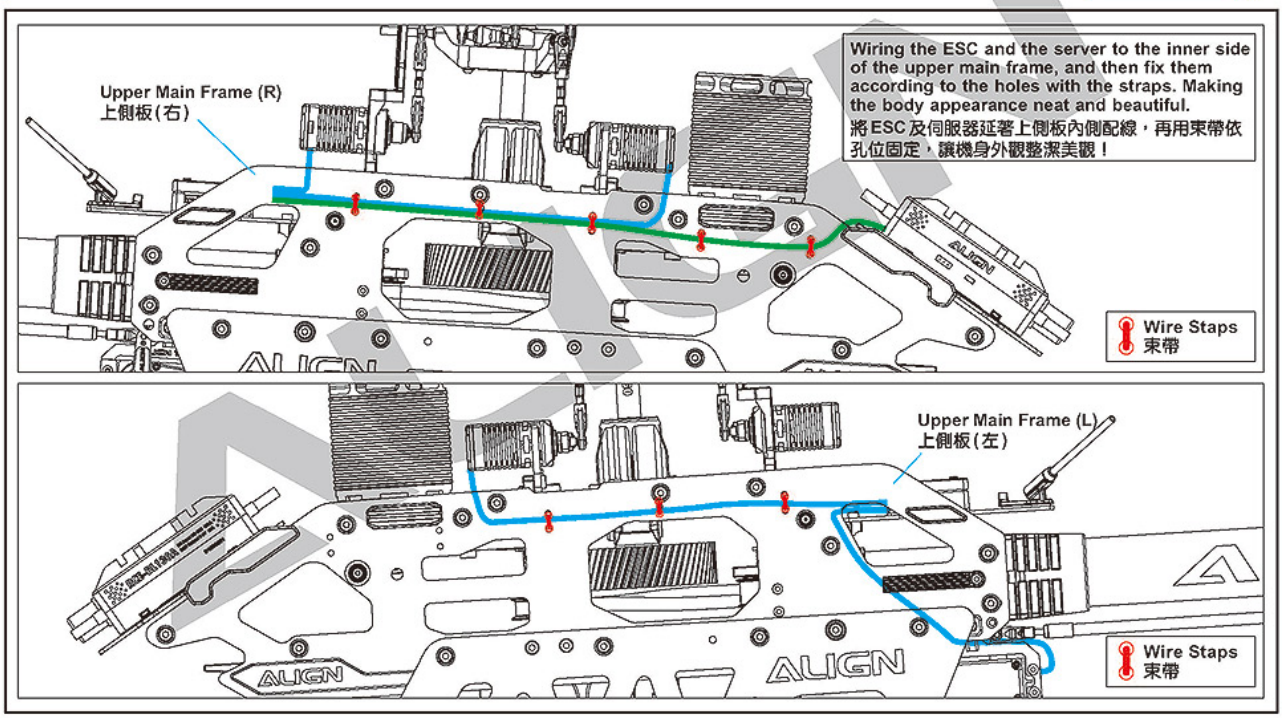

BATTERY INSTALLATION ILLUSTRATION 電池安裝示意圖

Please fix the 2 batteries On the battery mount evenly.
兩顆電池請平均固定於電池板上。

70B02

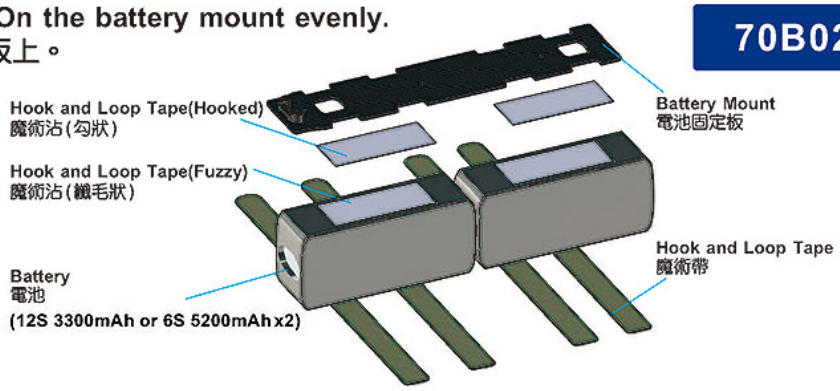

WARNING 警告

Please strictly abide by the precautions for use in the lithium-polymer battery manual. Improper use of lithium-polymer batteries may cause fire and damage life and property safety. Do not be careless!

請嚴格遵守鋰聚電池說明書之使用注意事項，不恰當使用鋰聚電池，可能造成火災並傷及生命財產安全，切勿大意！

BATTERY INSTALLATION ILLUSTRATION 電池安裝示意圖

INSERT THE BATTERY FROM THE FRONT
前置式電池滑軌設計

New 3K Main frame embedded with battery mounting rails with patented spring loaded latching mechanism.
3K側板與電池滑軌一體成型，整合式彈匣結構加卡榫設計。

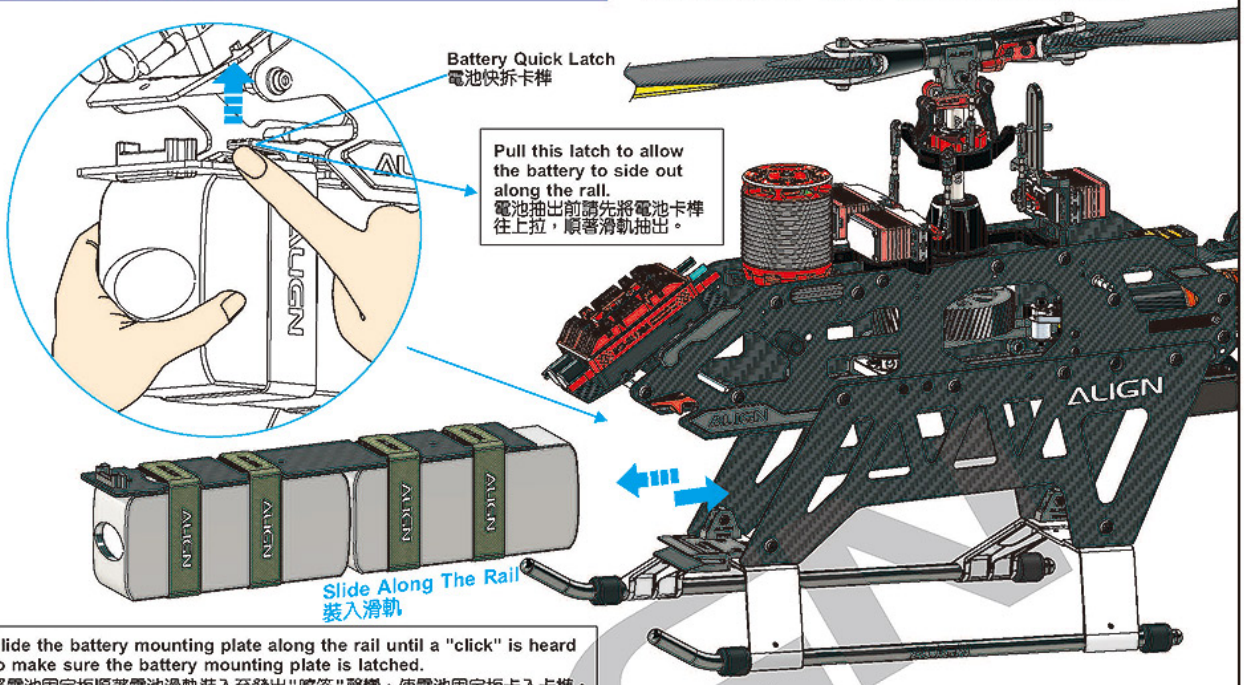

Slide the battery mounting plate along the rail until a "click" is heard to make sure the battery mounting plate is latched.
將電池固定板順著電池滑軌裝入至發出"喀答"聲響，使電池固定板卡入卡榫。

CANOPY ASSEMBLY 機頭罩安裝

Advanced Lightweight Canopy 高強度輕量化機頭罩

60C01

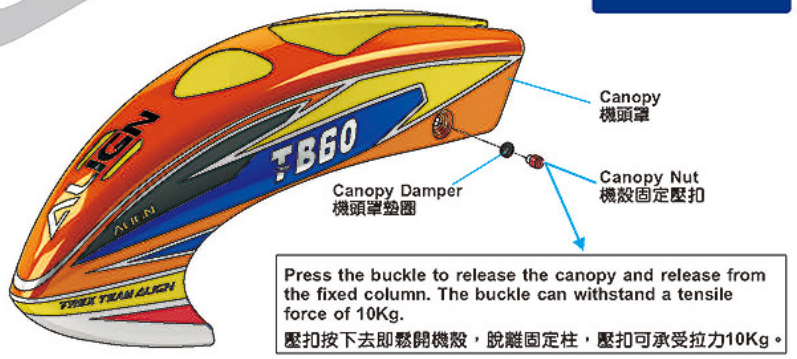

Press the buckle to release the canopy and release from the fixed column. The buckle can withstand a tensile force of 10Kg.
壓扣按下去即鬆開機殼，脫離固定柱，壓扣可承受拉力10Kg。

Quick release latch design for fast replacement
卡式快速拆換設計

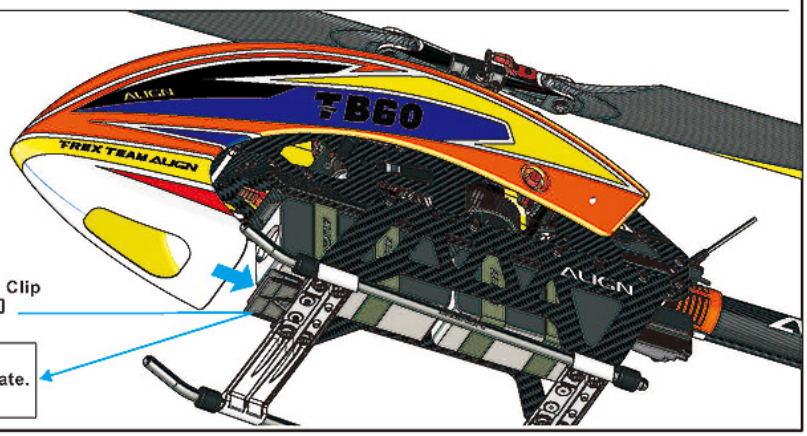

CAUTION 注意

When assembling the canopy to the unit, please completely wedge into the groove of the bottom plate.
機頭罩組裝於機體時，請完全卡入主體底板的溝槽內。

SERVO SETTING AND ADJUSTMENT 伺服器設定與調整

CAUTION 注意

To set this option is to turn on the transmitter and connect to BEC power.
Note: For the safety, please do not connect ESC to the brushless motor in order to prevent any accident caused by the motor running during the setting.
此項設定只要開啟發射器，接上BEC電源即可進行操作。 注意: 為了安全起見，設定前請先不要將無刷調速器與無刷馬達三條線接上，以免調整時啟動馬達而發生危險。

SERVO CONFIGURATION 伺服器配置

Following the servo configuration diagram on right, plug the servos to Gyro.
請依照右圖圖示的伺服器名稱，將伺服器接到陀螺儀。

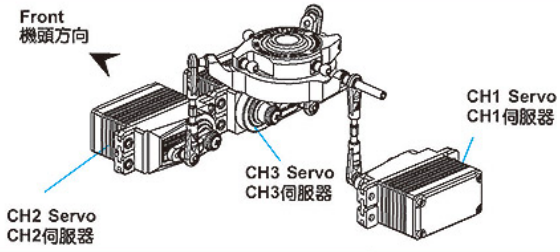

ADJUSTMENTS FOR GYRO AND TAIL NEUTRAL SETTING
陀螺儀與尾翼中立點設定調整

Turn off Revolution mixing(RVMX) mode on the transmitter, then set the gain switch on the transmitter and the gyro to non-head lock mode, or disable gain completely. After setting the transmitter, connect the helicopter power and proceed with rudder neutral point setting. Note: When connecting to the helicopter power, please do not touch tail rudder stick and the helicopter, wait for 3 seconds for gyro to enable, and the rudder servo horn should be 90 degrees to the tail servo. Tail pitch slider should be halfway on the tail output shaft. This will be the standard rudder neutral point. After completing this setting, set the gain switch back to heading lock mode, with gain at around 70%.

發射器內陀螺儀設定請關閉根軸混控模式，並將發射器上的感度開關與陀螺儀切至"非鎖定模式"或將陀螺儀感度關閉。發射器設定完成後接上直昇機電源，即可進行尾舵中立點設置。注意:當接上直昇機電源時請勿撥動尾舵搖桿或碰觸機體，待3秒陀螺儀開機完成後，尾伺服臂需與尾伺服器約成 90度，尾旋翼控制組須正確置於尾橫軸約中間位置，即為標準尾舵中立點設定，設定完成後，切換至"鎖定模式"，感度設約 70% 左右。

TAIL NEUTRAL SETTING 尾中立點設定

After the gyro is enable and under non-head lock mode, correct setting position of tail servo and tail pitch assembly is as photo. If the tail pitch assembly is not in the middle position, please adjust the length of rudder control rod to trim.

陀螺儀開機後，在非鎖定模式下，尾伺服器與尾 Pitch控制組正確擺置位置。若尾 Pitch控制組未置中時請調整尾控制連桿的長度來修正。

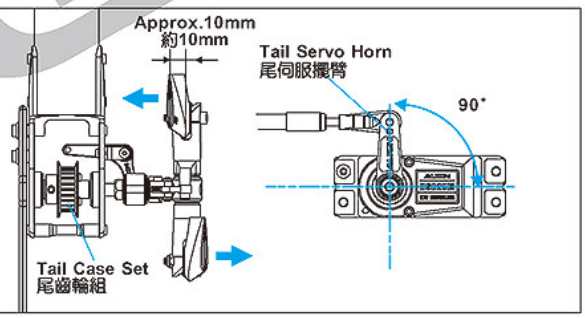

HEAD LOCK DIRECTION SETTING OF GYRO 陀螺儀鎖定方向設定

To check the head lock direction of gyro is to move the tail clockwise and the tail servo horn will be trimmed counterclockwise. If it trims in the reverse direction, please switch the gyro to"REVERSE".

陀螺儀鎖定方向確認，當手搖尾部順時鐘擺動，尾伺服臂應反時鐘修正，反向時請切換陀螺儀上"鎖定反向"開關修正。

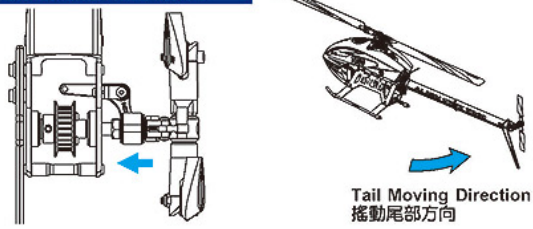

MAIN BLADES ROTATIONAL SPEED SETTING 主旋翼轉速設定

WARNING 警告

The maximum speed of TB60 helicopter is 2300RPM; 2150RPM is enough for hard 3D flight.
It is strictly forbidden to set the Main Blades speed to exceed 2300RPM during flight, over-rotation may cause damage to the body structure or unforeseen danger, even lives and property of others. Beginner are recommended the RPM/ speed setting should not exceed 1900RPM.

TB60直昇機，最高轉速為2300RPM；飛行時轉速2150RPM，動力已足夠暴力飛行。

直昇機的主旋翼有安全使用轉速範圍，飛行時主旋翼轉速設定嚴禁超過2300RPM，超轉可能導致機體結構破壞及不可預期之意外，甚至危害他人生命財產。初學者建議轉速設定不超過1900RPM。

WARNING 警告 The maximum speed of TB60 helicopter is 2300RPM; 2150RPM is enough for hard 3D flight.
TB60直昇機，最高轉速為2300RPM；飛行時轉速2150RPM，動力已足夠暴力飛行。

RCM-BL750MX (480KV/4236) MOTOR 無刷馬達

KV	KV值	480KV(RPM/V)	Input Voltage	輸入電壓	12S
Stator Diameter	定子外徑	42mm	Stator Thickness	定子高度	36mm
Stator Arms	矽鋼片槽數	12	Magnet Poles	磁鐵極數	10
Max Continuous Current	最大持續電流	100A	Max Instantaneous Current	最大瞬間電流	165A(5sec)
Max Continuous Power	最大持續功率	4400W	Max Instantaneous Power	最大瞬間功率	7620W(5sec)
Dimension	尺寸	Shaft ϕ6x52x96.1mm	Weight	重量	Approx. 452g

RCM-BL750MX (930KV/4236) MOTOR 無刷馬達

KV	KV值	930KV(RPM/V)	Input Voltage	輸入電壓	6S
Stator Diameter	定子外徑	42mm	Stator Thickness	定子高度	36mm
Stator Arms	矽鋼片槽數	12	Magnet Poles	磁鐵極數	10
Max Continuous Current	最大持續電流	120A	Max Instantaneous Current	最大瞬間電流	200A(2sec)
Max Continuous Power	最大持續功率	2660W	Max Instantaneous Power	最大瞬間功率	4400W(2sec)
Dimension	尺寸	Shaft ϕ6x52x96.1mm	Weight	重量	Approx. 452g

SPECIFICATION

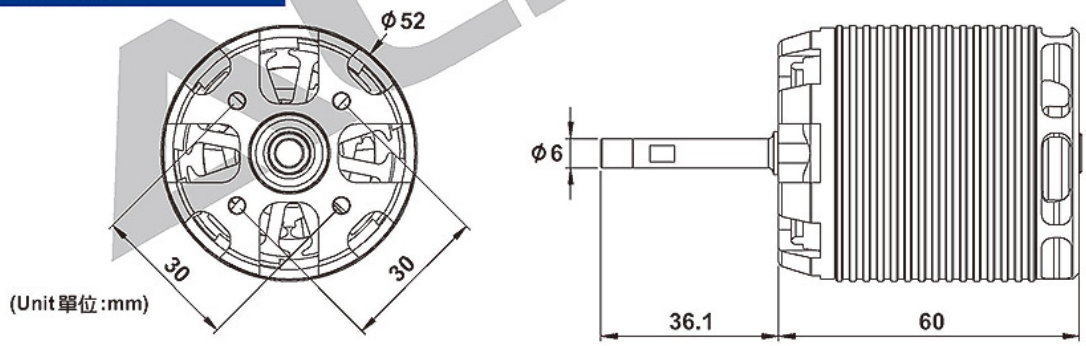

ILLUSTRATION 接線示意圖

CAUTION 注意 The motor rotates in different direction with different brand ESCs. If the wrong rotating direction happens, please switch any two cables to make the motor rotates in right direction.
由於各品牌電子變速器的馬達啟動轉向不盡相同，若發生轉向錯誤時，請將馬達與電子變速器的接線任兩條對調即可。

RCE-BL130A Brushless ESC can be set up by ALIGN ASBOX Multifunction Programmer. So please scan QR code for ALIGN website start downloading for more information:
http://www.align.com.tw/download-en/asbox/

RCE-BL130A無刷調速器可透過ALIGN ASBOX 多功能設定盒進入參數設定，請掃描QR Code 連結亞拓網站下載相關資訊：https://www.align.com.tw/index.php/download/asbox/

1. The default throttle range of this ESC is from 1100μs to 1940μs, so you need to re-calibrate the throttle range when the first time you use this ESC or after you replace the transmitter.
2. During the ESC/Radio calibration, please set the throttle curve to NORMAL and ensure the corresponding throttle amounts to the maximum throttle endpoint and the minimum throttle endpoint on your transmitter are respectively 100% and 0%.

1. 電子調速器的油門行程出廠預設值為1100μs~1940μs，當首次使用電子調速器或者更換其他遙控器使用時，均應重新設定油門行程。
2. 進行油門行程校準時，請將油門曲線設置為NORMAL，並確保遙控器油門最高點對應的油門值為100%，油門最低點對應的油門值為0%

RCE-BL130A BRUSHLESS ESC 無刷調速器

1. RPM Signal Wire(Yellow): plug it into the RPM input channel on the flybarless system. (This wire can be used for providing RPM signal data when using external speed-governing device.
2. BEC Output Wire (Red/Brown): plug it into the battery channel or any unoccupied channel on the receiver. (For better BEC power supply, we recommend plugging this wire into the battery channel or any unoccupied channel on FBL system if the FBL system is permitted.
3. Throttle Signal Wire (White/Red/Black): plug it into the throttle channel on the receiver or the corresponding channel on the FBL system, such as RX B channel on the VBAR system. For which channel you should plug it in, it depends on what kind of receiver and FBL system you use. The White wire is for transmitting throttle signals, the Red & Black cables are parallely connected in the BEC output wire, which means BEC voltage output wire and ground cable.

1. RPM信號線（黃）：插入無平衡翼系統轉速輸入通道；（當使用外部定速時，可使用RPM信號線提供轉速信號輸入。）
2. BEC輸出線（紅、棕）：這條額外的BEC輸出線插入接收機電池專用通道或任意空閒通道。（為獲得更好的BEC供電效果，在無平衡翼系統允許的情況下，建議將BEC線插入無平衡翼系統的電池專用通道或任意空閒通道。）
3. 油門信號線（白、紅、黑）：插入接收機油門通道或無平衡翼系統對應通道，如VBAR系統的RX B通道，依接收機類型及無平衡翼系統類型而定。其中白線用於傳送油門信號，而紅線和黑線分別並聯在內部BEC的輸出端（即BEC電壓輸出線和地線）。

I.Connections 接線示意圖

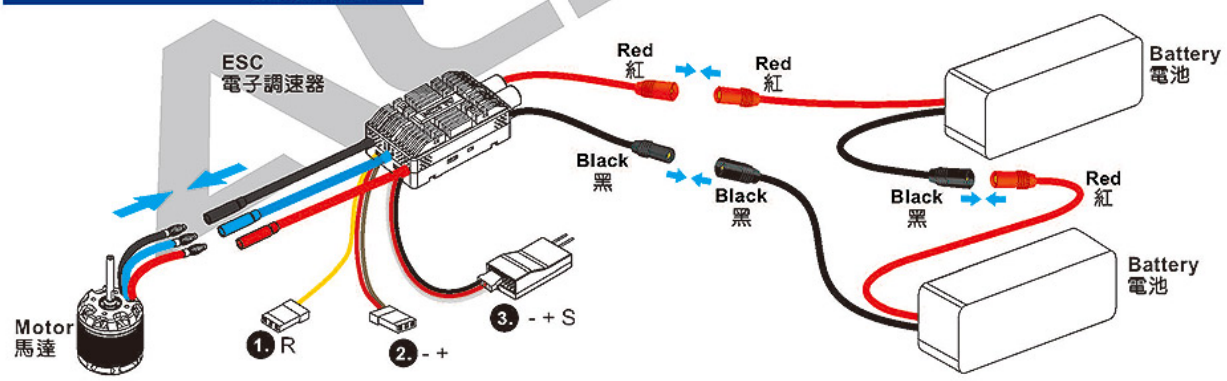

Model 型號	RCE-BL130A Brushless ESC RCE-BL130A無刷調速器
Input Voltage 輸入電壓	6~12S LiPo Battery 鋰電池(22.2V~44.4V)
Cont./Peak Current 持續/瞬間電流	130A/200A
BEC Voltage BEC電壓	Switch-mode, 5V~8V Adjustable Voltage (Step: 0.1V),10A/25A Cont./Peak Current 開關穩壓BEC，輸出電壓5V~8V可調(調整幅度為0.1V每階)，輸出電流持續10A，瞬間25A
Throttle Signal/BEC Output & RPM Signal Transmission Wire 油門信號/BEC輸出&RPM信號傳輸線	White: Throttle Signal Wire / Red/Black, Red/Brown: BEC Output Wire / Yellow: RPM Signal Transmission Wire 白色為油門信號線/紅黑和紅棕二色線為BEC輸出線/ 黃色為RPM信號傳輸線
Separate Programming Port 獨立參數程式設計介面	For connecting ALIGN ASBOX Multifunction Programmer, WIFI module, or cooling fan. 用於連接多功能LCD專業程式設計設定盒或WIFI模組，可為輔助散熱風扇供電
Size/Weight 尺寸/重量	92x45.5x28.5mm/195g

RCE-BL150A BRUSHLESS ESC 無刷調速器

1. RPM Signal Wire(Yellow) & BEC Output Wire (Red/Brown): plug it into the RPM input channel on the flybarless system. (This wire can be used for providing RPM signal data when using external speed-governing device. plug it into the battery channel or any unoccupied channel on the receiver. (For better BEC power supply, we recommend plugging this wire into the battery channel or any unoccupied channel on FBL system if the FBL system is permitted.
2. Throttle Signal Wire (White/Red/Black): plug it into the throttle channel on the receiver or the corresponding channel on the FBL system, such as RX B channel on the VBAR system. For which channel you should plug it in, it depends on what kind of receiver and FBL system you use. The White wire is for transmitting throttle signals, the Red & Black cables are parallely connected in the BEC output wire, which means BEC voltage output wire and ground cable.

1. RPM信號線（黃）及BEC輸出線（紅、棕）：插入無平衡翼系統轉速輸入通道；（當使用外部定速時，可使用RPM信號線提供轉速信號輸入。這條額外的BEC輸出線插入接收機電池專用通道或任意空閒通道。（為獲得更好的BEC供電效果，在無平衡翼系統允許的情況下，建議將BEC線插入無平衡翼系統的電池專用通道或任意空閒通道。）
2. 油門信號線（白、紅、黑）：插入接收機油門通道或無平衡翼系統對應通道，如VBAR系統的RX B通道，依接收機類型及無平衡翼系統類型而定。其中白線用於傳送油門信號，而紅線和黑線分別並聯在內部BEC的輸出端（即BEC電壓輸出線和地線）。

I.Connections 接線示意圖

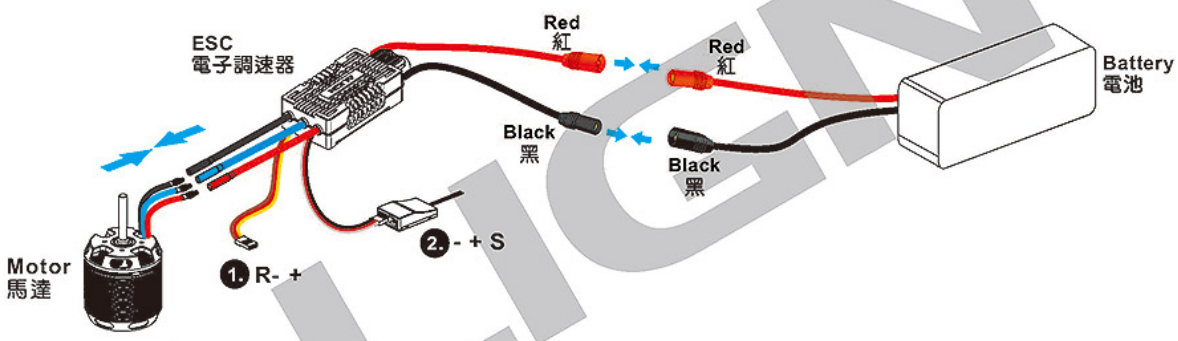

Model 型號	RCE-BL150A Brushless ESC RCE-BL150A無刷調速器
Input Voltage 輸入電壓	18~24S LiPo Battery 鋰電池(22.2V~51.8V)
Cont./Peak Current 持續/瞬間電流	50A/150A
Throttle Signal/BEC Output & RPM Signal Transmission Wire 油門信號/BEC輸出&RPM信號傳輸線	White/Red/Black: Throttle Signal Wire ; Red/Brown/Yellow: BEC Output & RPM Signal Transmission Wire 白、紅、黑三色線為油門信號線；紅、棕、黃三色線為BEC輸出及RPM信號傳輸線
Size/Weight 尺寸/重量	164x66x38mm/464g

II.Throttle Range Calibration 油門行程校準操作方法

1. Turn on the transmitter and move the throttle stick to the top position.
開啟遙控器，將油門打到最高點

2. Connect the ESC to a battery. The motor will emit "♪ 123" indicating the ESC is powered on normally.
電子調速器接電池，馬達鳴叫"♪123"提示音，表示供電正常

3. 5 seconds later, the motor will emit two short beeps indicating the maximum throttle position has been successfully calibrated and accepted.
等待5秒，馬達發出"嗶-嗶-"雙短鳴音，表示油門最高點校準成功

4. Move the throttle stick to the bottom position. 1 second later, a short beep will emit indicating the minimum throttle position has been accepted.
將油門搖杆推到最低，等待1秒，"嗶"一聲提示音，油門最低點校準成功

5. The ESC will keep beeping indicating the number of LiPo cells you have plugged in. (A long beep represents 5, a short beep represents 1. E.g. The ESC will beep two long beeps and two short beeps to indicate a 12S LiPo pack.
馬達將繼續鳴叫提示當前鋰電池數（長音嗶—表示5，短音嗶-表示1，例如：12S鋰電池將鳴叫"嗶—嗶—嗶-嗶-"）

6. The motor will beep a long beep to indicate the calibration is completed, the power system is ready to go.
馬達鳴叫"長音嗶—"代表校準成功，系統準備就緒，可隨時起飛

CHECKLIST AFTER FLIGHT 飛行後檢查清單

WARNING 警告
CAUTION 注意

Maintenance and careful inspection before and after flights are the most important part of flight safety, pilots are responsible for every detail to implement. Negligence of these inspections and maintenance may lead to accidents and dangers during the flight, and even damage to life and property.

飛行前/後的仔細檢查和維護保養是飛行安全最重要的一環，飛行員必須對每一個細節負責並落實到位。忽視這些檢查和維護，可能會導致飛行過程中發生事故和危險，甚至造成生命財產損失。

1

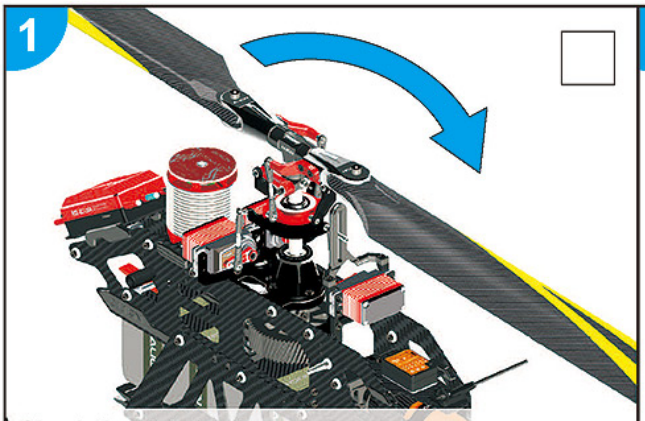

Check the Main blades.

Visually inspect if the appearance of the Main Blades is good, and carefully check that there is no damage, crack or anormality on the surface.

2

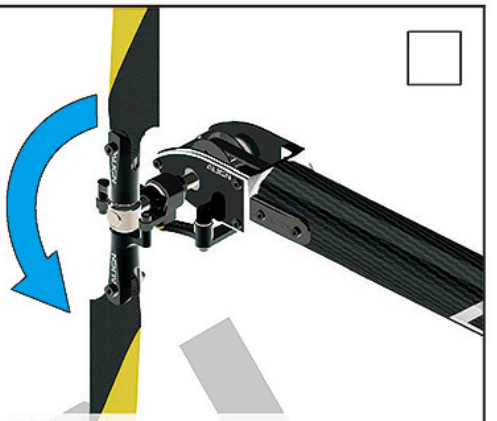

Check the Tail Blades.

Visually inspect if the appearance of the Tail Blades is good, and carefully check that there is no damage, crack or abnormality on the surface.

3

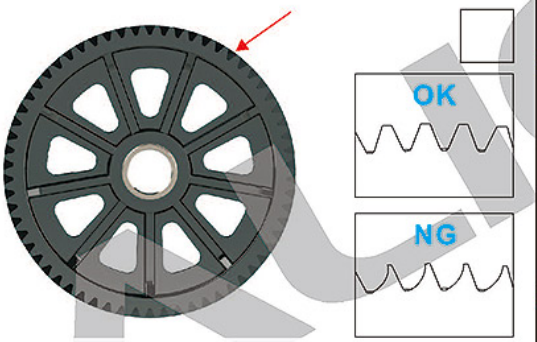

Please check to the main gear regularly, and replace it if obvious wear is found. The main gear is a consumable.

Please pay attention to check and replace new gears every 100 times of 3D sport flight.

4

Check All electronic equipment connection.

Plug, socket and cable appearance is good, correctly and firmly connected with each other.

5

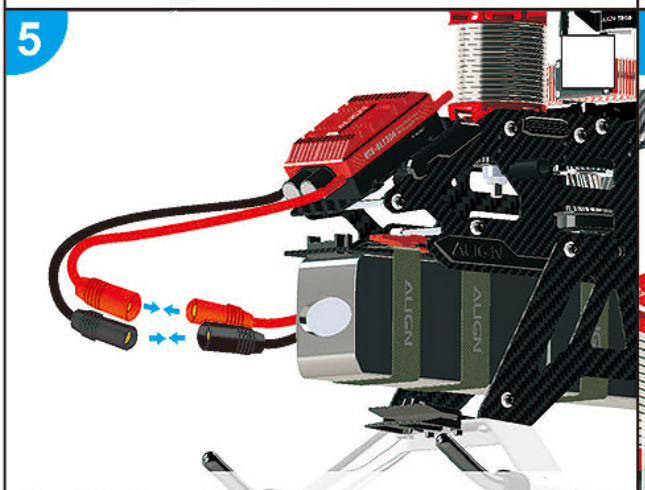

Check battery efficiency.

To prevent the plug from falling off and causing power failure, the plug and socket must be connected firmly.

6

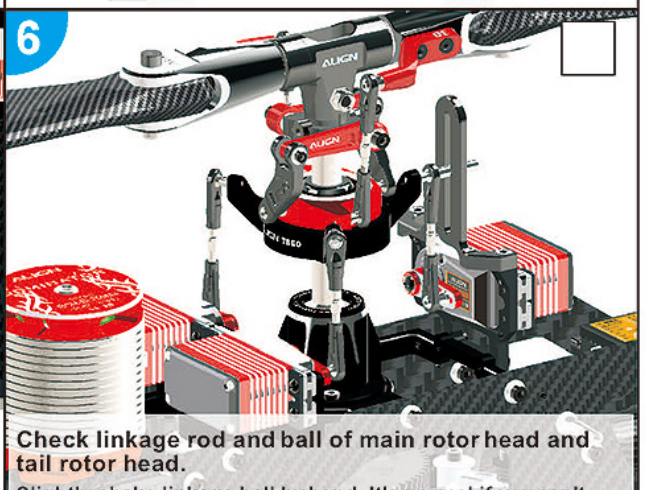

Check linkage rod and ball of main rotor head and tail rotor head.

Slightly shake linkage ball by hand. It's normal if you can't shake it; however, it's abnormal if it's shaken a lot and must be replaced the new linkage and linkage balls to prevent loose parts for any flight error and danger.

7

Check thrust bearing and bearing of main rotor holder.

Check if there is wear or damage of thrust and bearing. Bearing should be smooth enough. If anything is worn, it must be replaced immediately.

Please follow the instructions for thrust bearing assembly. Any incorrect assembly will result in flight error.

8

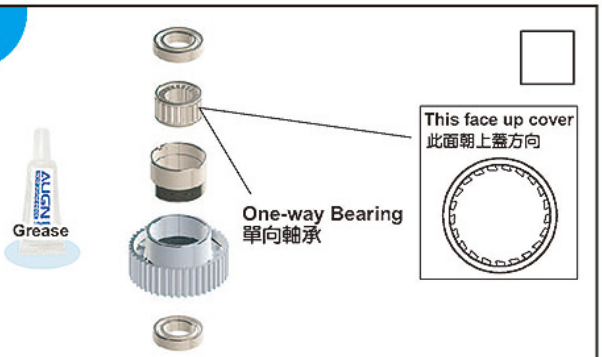

Check one-way bearing is rotated well and apply a little amount of grease on it for maintenance.

9

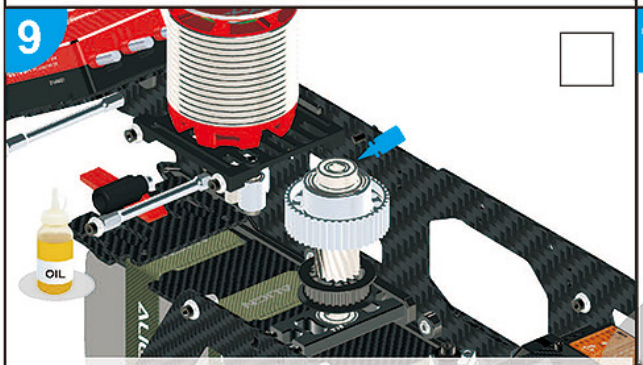

Main Shaft Bearing Block Maintenance.

Gently rotate the motor bearing. If it works smoothly, then apply oil on it for maintenance.

If it does not work smoothly, please change the new bearings.

10

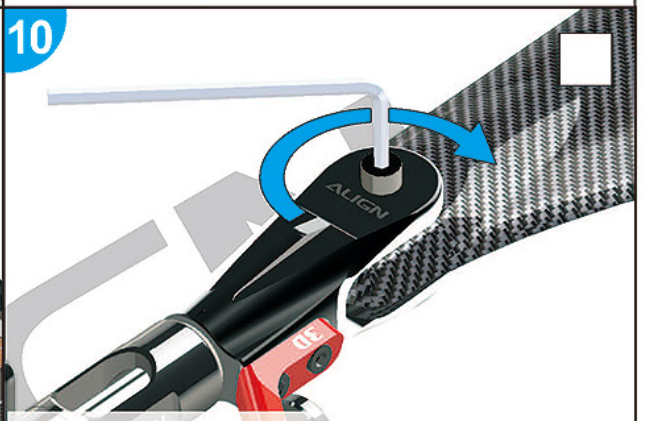

Check the socket collar screws of Main Blades to ensure they are tightening.

11

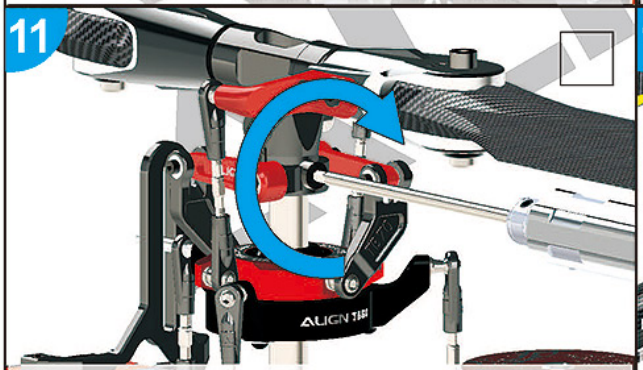

Check the M4 nut screws to ensure they are tightning

12

Check Tail assembly screws to ensure they are tightning.

13

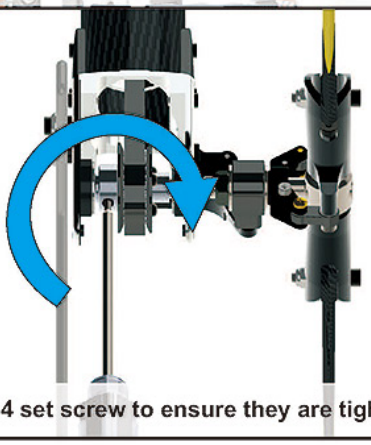

Chcek the M4 set screw to ensure they are tightning.

14

Check socket screws to ensure they are tightning.

	Problem 狀況	Cause 原因	Solution 對策
Blade Tracking 雙槳平衡	Tracking is Off 雙槳	Pitch linkage rods are not even length PITCH連桿長度調整不平均	Adjust length of Linkage rod A. 調整連桿A長度
Rudder Response 尾舵反應	Drifting of tail occurs during hovering, or delay of rudder response when centering rudder stick. 停懸時尾翼向某一邊偏移，或撥動方向舵並回復到中立點時，尾翼產生延遲，無法停頓在所控制位置上。	Rudder neutral point improperly set 尾中立點設定不當	Reset rudder neutral point 重設尾中立點
		Rudder gyro gain too low 尾舵陀螺儀感度偏低	Increase rudder gyro gain 增加尾舵陀螺儀感度
	Tail oscillates (hunting, or wags) at hover or full throttle 停懸或全油門時尾翼左右來回搖擺。	Rudder gyro gain too high 尾舵陀螺儀感度偏高	Reduce rudder gyro gain 降低尾舵陀螺儀感度

If above solution does not resolve your issues, please check with experienced pilots or contact your Align dealer.
※在做完以上調整後，仍然無法改善情況時，應立即停止飛行並向有經驗的飛手諮詢或連絡您的經銷商。

FLIGHT NOTE

1. Helicopter and related equipment should be maintained on a regular schedule.
2. Make sure to check flight and record it every time. This record would be helpful for your future reference of maintenance and repaired.
3. Pre-flight and after flight, please deliberately check if every spare parts and electronic equipment work well and no damage.
4. Please strictly do every inspection and check the screws are locked well, not loose at all, before flight.
5. Regular maintenance recommendations: Replace thrust bearings every 30 hours of flight. Replace the main shaft fixed bearing(6901ZZ) and main rotor clamp bearing(6800ZZ) every 60 hours of flight. When the number of flights exceeds 100, please carry out regular maintenance of the entire aircraft and replace parts (such as bearings and washers) to ensure flight safety.
6. For more operation introduction, please read the instruction manual carefully and obey the local regulations.

飛行小叮嚀：

1.飛行機及相關設備均需要定期維護保養！
2.每次檢查保養應確實記錄，良好的保養檢查及飛行習慣，將會提供您日後維修或更換耗材的參考及幫助。
3.飛行前、及飛行後，務必詳細檢查機身各部位零配件／電子設備之性能是否正常，而且無損耗老化現象。
4.請嚴格執行檢查的義務，飛行前應檢查螺絲確實鎖緊沒有鬆動，才能升空飛行。
5. 定期保養建議：每飛行30小時，更換止推軸承。每飛行60小時更換主軸固定軸承、主旋翼夾軸承。
飛行次數超過100趟時，請進行全機定期保養並更換零件(如軸承類及墊圈等消耗品)，以確保飛行安全。
6.更多詳細操作介紹，請參閱使用說明書，並且遵守當地法規。

Thank you for purchasing and supporting ALIGN products.

The Align Team is dedicated to you by innovating and developing new RC Helicopters, Multicopters, and FPV Racing Quads. We strive to provide a more diversified experience for our customers. Visit our website at www.align.com.tw for latest news, information, and updates about our extensive line of products for the RC enthusiasts.

Good Flying!

再次感謝您對亞拓系列商品的喜愛與支持，您的肯定是對我們最大的認同。

亞拓團隊秉持創新研發的精神，開發遙控直昇機／多軸飛行機／穿越機系列商品，提供給您體驗更多樣化的飛行樂趣。
您可以透過下列連結，隨時瞭解亞拓的最新動態，以及各項訊息分享。

祝福您有一個愉快的飛行體驗。

ALIGN Flight Safety
亞拓飛行安全宣導

ALIGN Shopping Cart
亞拓購物車

facebook
ALIGN FaceBook

ALIGN Website
亞拓官網

ALIGN Quick Finder
亞拓零件快速購

YouTube
ALIGN YouTube

一、遙控無人機產品標示

本產品最大起飛重量：5.04公斤	(1)
☑應　☐免　依遙控無人機管理規則至民航局「遙控無人機規範管理系統」（https://drone.caa.gov.tw/）進行線上註冊，註冊號碼應標明於機身顯著處。	(2)
☑應　☐免　具備航空站或飛行場圖資軟體功能。	(3)
☐具型式檢驗(認可)標籤且應向民航局申請辦理實體檢驗。☑免辦理檢驗或認可。	(4)(5)
操作人☐免持操作證　☐應持普通操作證　☑應持專業操作證。	(6)
操作本產品前，經檢查確保符合飛航安全條件後從事活動，並禁止飲酒或使用影響精神之藥物，亦不得於公告禁止或限制區域飛航，其餘請詳參見本產品所附操作手冊說明。	(7)(8)
違反上述規定者，中央及地方主管機關得依民航法禁止其活動，並處以新臺幣1萬至150萬元罰鍰，情節重大者沒入遙控無人機。	(9)(10)
本標示依據遙控無人機管理規則第17條第1項規定辦理。	(11)

二、遙控無人機相關法規說明：

(1) 遙控無人機管理規則(以下稱管理規則)第6條第1項：自然人所有之最大起飛重量250公克以上之遙控無人機及政府機關(構)、學校或法人所有之遙控無人機，應由其所有人向民航局申請註冊，並將註冊號碼標明於遙控無人機上顯著之處後，始得操作。

(2) 管理規則第8條：註冊號碼應依下列方式標明於遙控無人機上顯著之處：一、以標籤、鐫刻、噴漆或其他能辨識之方式標明，且應確保每次飛航活動時不至脫落並保持清潔、明顯使能辨識。二、標漆位置應為遙控無人機之固定結構外部。三、其顏色應使註冊號碼與背景明顯反襯，且以肉眼即能檢視。

(3) 管理規則第12條第1項：最大起飛重量1公斤以上且裝置導航設備之遙控無人機，應具備防止遙控無人機進入禁航區、限航區及航空站或飛行場四周之一定距離範圍之圖資軟體系統，其圖資應符合本法第4條劃定及第99條之13第1項公告之範圍。

(4) 管理規則第13條：遙控無人機之設計、製造、改裝，應由設計者、製造者或改裝者檢附申請書向民航局申請型式檢驗，經型式檢驗合格者，發給型式檢驗合格證，並發給型式檢驗標籤。
自國外進口之遙控無人機，應由進口者依第一項規定向民航局申請型式檢驗，或檢附申請書向民航局申請認可。經認可者，發給認可證明文件及型可標籤。
前二項之遙控無人機，其型式構造簡單經民航局公告者，得免辦理檢驗或認可。

(5) 管理規則第15條第1項：最大起飛重量25公斤以上之遙控無人機，為確保遙控無人機符合設計、製造、改裝之性能諸元，應由其所有人檢附申請書向民航局申請實體檢驗，經檢驗合格者，發給實體檢驗合格證。

(6) 管理規則第20條：遙控無人機操作證分類、申請者年齡及其他規定如下：
A. 學習操作證：申請者應年滿16歲，經申請後，由民航局發給。
B. 普通操作證：申請者應年滿18歲，經學科測驗合格後，由民航局發給。
C. 專業操作證：申請者應年滿18歲並符合相關經歷規定後，經體格檢查及學、術科測驗合格後，由民航局發給。
前項各類操作證之操作權限如下：一、學習操作證：持有人得於持有遙控無人機普通操作證或專業操作證之操作人在旁指導下，依其普通操作證或專業操作證所載之構造分類，學習操作最大起飛重量未達二十五公斤之遙控無人機。二、普通操作證：持有人得操作自然人所有最大起飛重量二公斤以上、未逾十五公斤且裝置導航設備之遙控無人機。三、專業操作證：持有人得操作政府機關（構）、學校或法人所有之遙控無人機及自然人所有最大起飛重量十五公斤以上之遙控無人機。

(7) 管理規則第25條：操作人操作遙控無人機應遵守下列事項：一、血液中酒精濃度不得超過百分之0.02或吐氣中酒精濃度不得超過每公升0.1毫克。二、不得受精神作用物質影響，導致行為能力受到損傷。三、不得對任何生命與財產有造成危險之操作行為。

(8) 管理規則第26條：操作人從事遙控無人機飛航活動前，應依遙控無人機製造者所提供之維修指引對遙控無人機系統進行檢查，符合安全飛航條件後始得活動。

(9) 民用航空法遙控無人機專章第118條之1：遙控無人機之所有人或操作人有下列情事之一者，由民航局廢止其操作證，並處新臺幣30萬元以上150萬元以下罰鍰，並得沒入遙控無人機：一、違反第99條之13第1項規定，於禁航區、限航區及航空站或飛行場四周之一定距離範圍內從事飛航活動。二、違反第99條之14第1項第1款規定，逾距地面或水面高度400呎從事飛航活動。

(10) 民用航空法遙控無人機專章第118條之2：遙控無人機之所有人或操作人有下列情事之一者，禁止其活動，並處新臺幣6萬元以上30萬元以下罰鍰；情節重大者，並得沒入遙控無人機：一、違反第99條之10第2項規定，未領有操作證而操作遙控無人機。二、違反第99條之15第3項規定，未投保或未足額投保責任保險而從事遙控無人機活動。
遙控無人機之所有人或操作人有下列情事之一者，禁止其活動，並處新臺幣3萬元以上15萬元以下罰鍰；情節重大者，並得沒入遙控無人機：一、違反第99條之10第1項有關遙控無人機註冊或標明註冊號碼之規定。二、違反第99條之13第2項有關直轄市、縣（市）政府公告區域、時間及其他管理事項之規定。三、違反第99條之14第1項第2款至第10款遙控無人機飛航活動應遵守之規定。
本條規定之處罰，除同時違反第99條之13第1項或第99條之14第1項第1款由民航局處罰外，由直轄市、縣（市）政府處罰之。

(11) 民用航空法遙控無人機專章第118條之3：違反依第99條之17所定規則有關射頻識別、檢驗、認可、維修與檢查、飛航活動之活動許可及內容、製造者與進口者之登錄及責任、飛航安全相關事件之通報等事項規定者，禁止其活動，並處新臺幣1萬元以上150萬元以下罰鍰；情節重大者，並得沒入遙控無人機。

※有關後續遙控無人機法規最新資訊，請詳見：（https://drone.caa.gov.tw/）或掃瞄右方QR Code連結。

感謝您購買亞拓系列商品，謹表謝意！

1. 亞拓E1植保直昇機、M4 / M6植保多軸機、M470L / M480XL / M690L多功能無人機、屬『衛星導航無人機』，民航局已有預先登錄資料，操作者可直接在交通部民用航空局無人機專區註冊完後，登錄系統下拉選擇型號即可快速完成註冊程序。
2. 亞拓T-REX系列/E1空機版/MR25XP穿越機/多軸空拍機系列商品，其屬於『自製無人機(含航空模型機)』，飛友需自行辦理型號登錄作業。
3. 相關型號、構造、尺寸(長x寬x高)、飛機翼展/直昇機旋翼半徑/多旋翼軸距、使用動力、導航方式…等詳細資訊，請連結右側QR Code『亞拓無人機註冊資料』、或參考『亞拓無人機註冊教學』進行登錄註冊。

連結QR Code 亞拓無人機註冊資料

連結QR Code 亞拓無人機註冊教學

STANDARD EQUIPMENT

Versions / Equipment	12S Combo	6S Combo	Kit
Illustration			
Brushless Motor	RCM-BL750MX(480KV/4236)	RCM-BL750MX(930KV/4236)	———
Brushless ESC	RCE-BL130A	RCE-BL150A	———
Cyclic Servo	DS830M x3	DS830M x3	———
Tail Servo	DS835M	DS835M	———
Flybarless System	———	Microbeast Flybarless System	———
Main Blade	600 Carbon Fiber Blades	600 Carbon Fiber Blades	600 Carbon Fiber Blades
Tail Blade	95 Carbon Fiber Tail Blades	95 Carbon Fiber Tail Blades	95 Carbon Fiber Tail Blades
Motor Belt Pulley	23T	23T	23T
Drive Gear Ratio	7.89 : 1 : 5.04	7.89 : 1 : 5.04	7.89 : 1 : 5.04
Max RPM (approx.)	2400RPM	2300RPM	———

SPECIFICATION

Versions / Equipment	12S Combo	6S Combo	Kit
Length	1218mm	1218mm	1218mm
Width	183mm	183mm	183mm
Height	353mm	353mm	353mm
Main Blade Length	600mm	600mm	600mm
Main Rotor Diameter	1339mm	1339mm	1339mm
Tail Length	105mm	105mm	105mm
Tail Rotor Diameter	273mm	273mm	273mm
Frame Weight	2.9kg	2.8kg	1.8kg

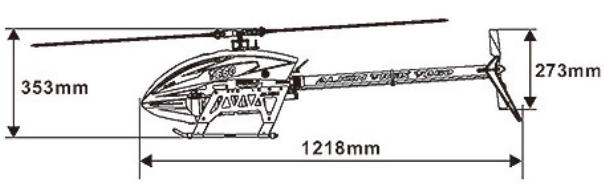

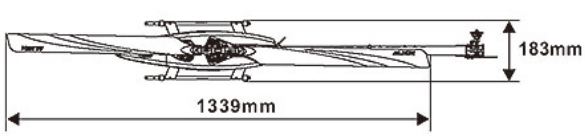

ALIGN

亞拓科技股份有限公司
ALIGN CORPORATION LIMITED MADE IN TAIWAN 2023.Jun.02 G00785